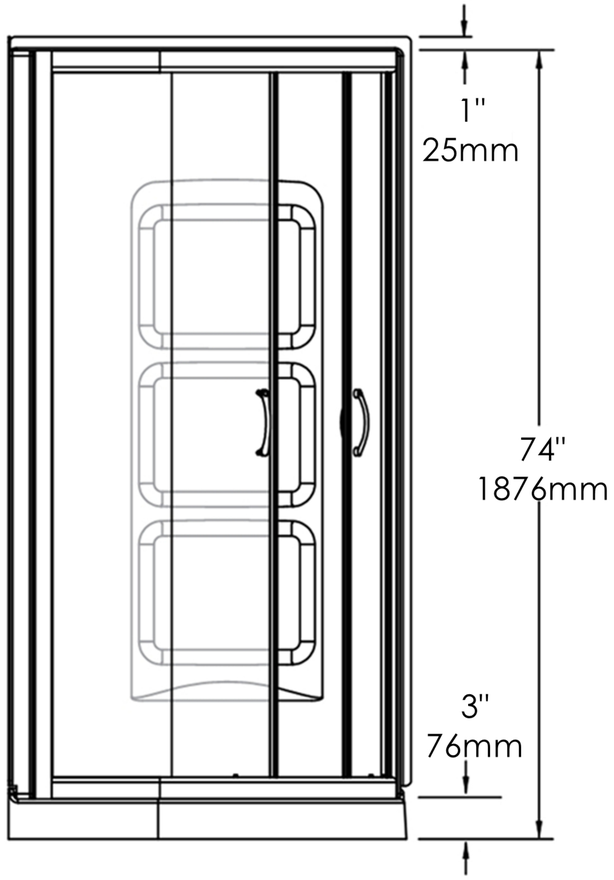

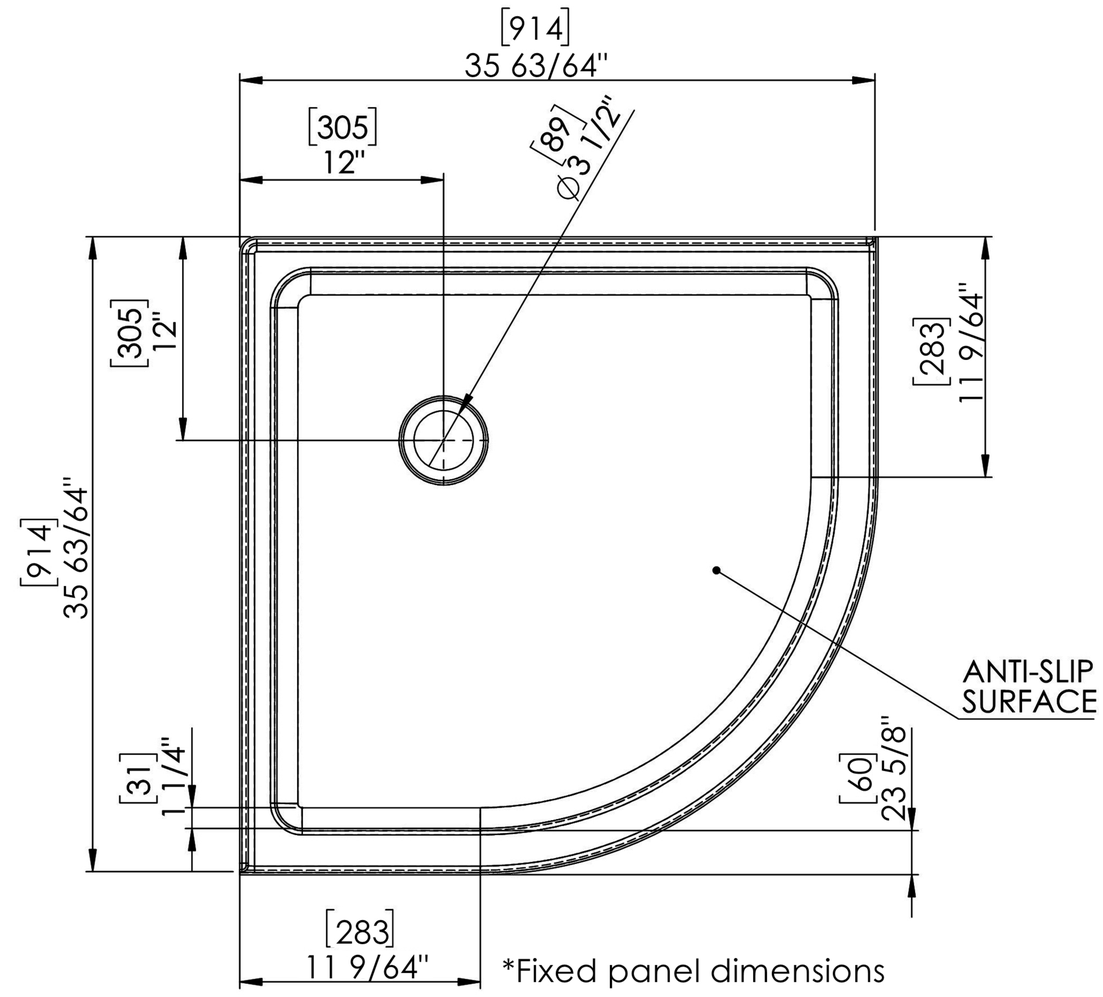

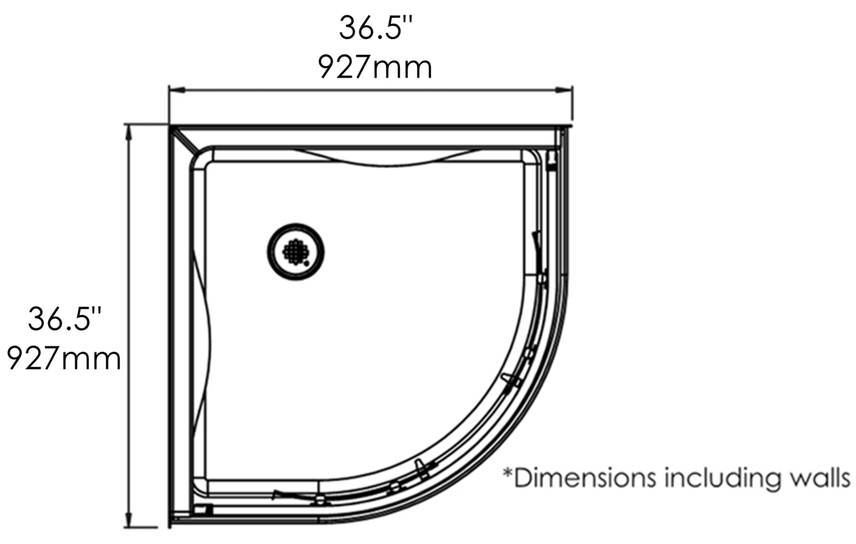

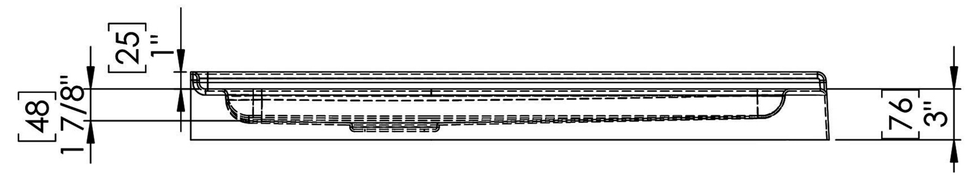

*Basin demensions only