733290423

Owner's Manual & Assembly Guide

SOJAG

Steel Garage

EVEREST SERIES

12' GARAGE

All Sizes

arrowshed.com
Visit our website for compatible accessories

caution
sharp edges *
Gloves must be worn at all times to reduce risk of injury!

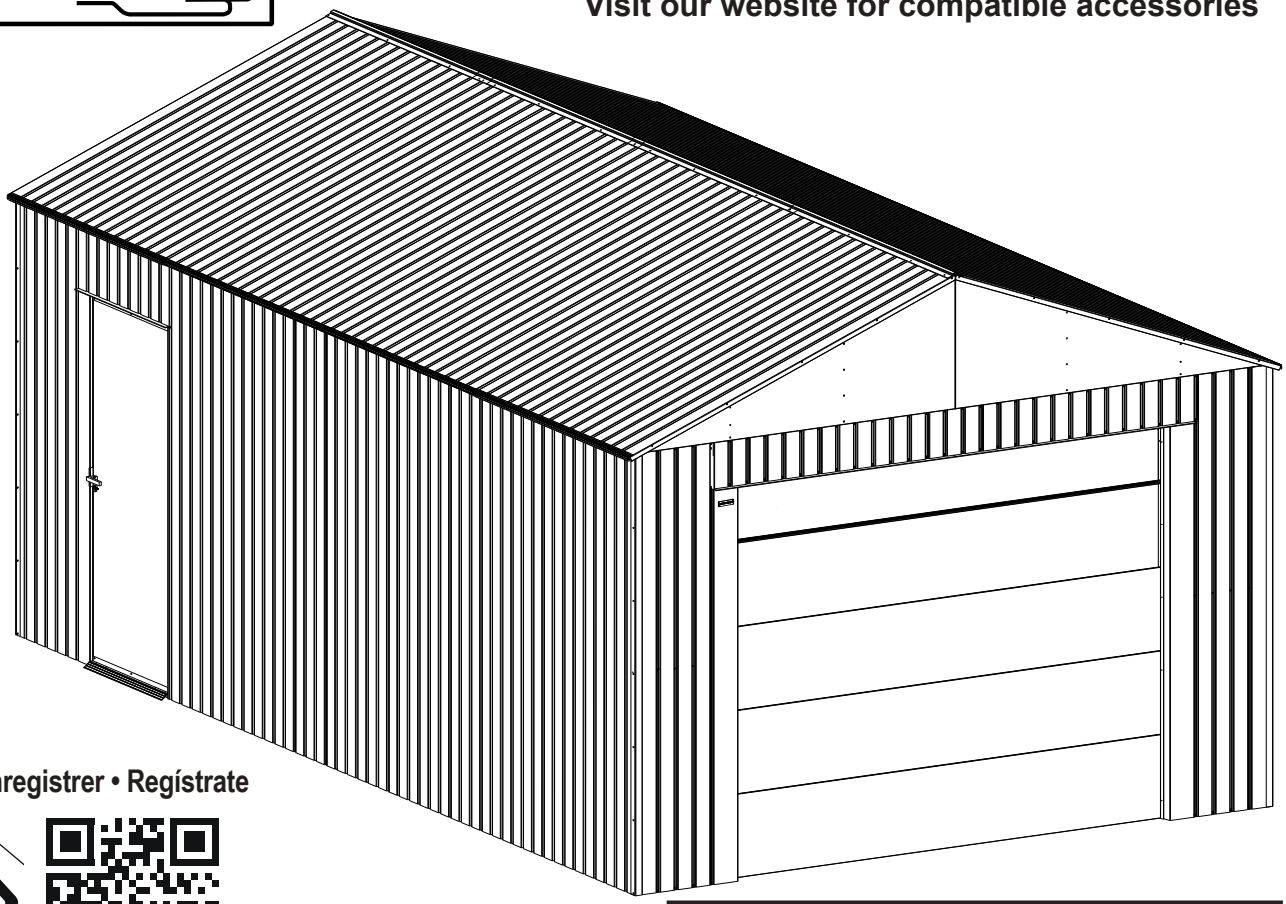

Register • Enregistrer • Regístrate

ShelterLogic.com/product-registration

Base Size	142.13" x 119.30" 361,0 cm x 303,0 cm
Additional per Extension	142.13" x 60" 361,0 cm x 152,4 cm

BUILDING DIMENSIONS

† Size rounded off to the nearest foot

Approx.† Size	Storage Area		Exterior Dimensions (Roof Edge to Roof Edge) Width	Depth	Height	Interior Dimensions Width	Depth	Height	Door Opening Width	Height
12' x 10'	116 Sq. Ft.	1043 Cu. Ft.	146.13"	123.56"	123.48"	141.13"	118.30"	122.23"	28.30" (Roll Up Door) 95.00"	78.35" 83.66"
3,7 m x 3,0 m	10,8 m^2	29,5 m^3	371,2cm	313,8 cm	313,6 cm	358,5 cm	300,5 cm	310,5 cm	71,9 cm (Roll Up Door) 241,3 cm	199,0 cm 212,5 cm

Each Extension adds an additional 60" (152,4 cm) in length, 59 Sq. Ft. (5,4 m^2) additional storage area, and 529 Cu. Ft. (15,0 m^3) additional storage volume.

*** See Inside for Detailed Safety Information.**

GB: Assembly manual in additional languages available online.
Scan QR code below to access.

FR: Manuel de montage disponible en ligne dans d'autres langues.
Pour y accéder, scannez le code QR ci-dessous.

DE: Montageanleitung in zusätzlichen Sprachen online verfügbar.
Scannen Sie den QR-Code unten, um darauf zuzugreifen.

IT: Manuale dell'assemblea in altre lingue disponibile online.
Per accedere effettua la scansione del codice QR in basso.

DT: Samlingshåndbog i yderligere sprog til rådighed online.
Scan QR kode nedenunder for at få adgang.

SK: Na internete je k dispozícii návod na zostavenie v ďalších jazykoch.
Dostanete sa k nemu naskenovaním kódu QR.

CZ: Návod k montáži v dalších jazycích je k dispozici v online verzi.
Přístup získáte po naskenování QR kódu níže.

DE: Monteringsmanual på ytterligare språk tillgängliga online.
Skanna QR-kod nedan för att komma åt.

RM: Manualul de asamblare în alte limbi disponibile online.
Scanați codul de mai jos pentru a accesa.

SAFETY & MAINTENANCE

Safety precautions MUST be followed at all times throughout the construction of your building!

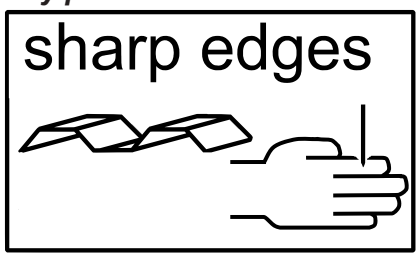

Care must be taken when handling various pieces of your building since many contain sharp edges. Please wear work gloves, eye protection and long sleeves when assembling or performing any maintenance on your building.

Practice caution with the tools being used in the assembly of this building. Be especially familiar with the operation of all power tools.

Do NOT attempt to assemble your building on a windy day. The large panels can catch the wind like a “sail”, causing them to be whipped around making construction difficult and unsafe.

Do NOT attempt to assemble your building before double checking that you have all the parts indicated on the parts list as well as all hardware. Any building left partially assembled may be seriously damaged by even light winds.

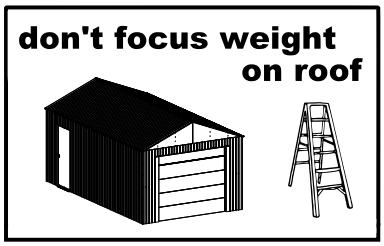

NEVER concentrate your weight on the roof of the building. When using a step ladder make sure that it is fully open and on even ground before climbing on it.

Keep children and pets away from the worksite during construction and until the building is completely assembled. This will help avoid distractions and any accidents which may occur.

IMPORTANT NOTE ON ANCHORING

- Your building MUST be anchored to prevent wind damage. See anchoring page for more info.
- You must also have a temporary anchoring system in place in case you need to take a break from assembly.

Exterior Care:

For a long lasting finish, clean the exterior surface. We recommend washing with a mild soap solution. DO NOT use power washing to clean your shed.

Combustibles and corrosives must be stored in air tight containers designed for chemical and/or combustible storage. Corrosive chemicals such as fertilizers, pesticides and herbicides should be cleaned off the interior and exterior surfaces immediately. Rust caused by chemical damage is not covered by the warranty.

Rust protection precautions may help to stop rust from developing, or stop it quickly as soon as it appears.

- Avoid nicking or scraping the coating surface, inside and out.
- Keep roof and base perimeter free of debris and leaves which may accumulate and retain moisture. These can do double damage since they give off acid as they decay.
- Touch up scrapes or nicks and any area of visible rust as soon as possible. Make sure the surface is free of moisture, oils, dirt or grime and then apply an even film of high quality touch-up paint.
- Various paint manufacturers provide products for rust treatment and coverage. If surface rust does appear on your shed we recommend treating those areas as soon as possible, following the paint supplier of your choice instructions.
- Our customer service department can provide the paint tinting formula for matching the color of your shed. We also have touch-up paint available for repairing small nicks and scratches.

Roof: Keep the roof clear of leaves and snow. Heavy amounts of snow on the roof can damage the building making it unsafe to enter.

Fasteners: Regularly check fasteners and retighten as necessary.

General: Wash off inked part numbers on coated panels with soap and water.

Please note, Manufacturer cannot be held responsible for any consequences due to buildings that are not installed per these instructions, or for damage due to weather conditions or acts of God.

Keep these assembly instructions and owner’s manual for future reference.

ASSEMBLY TIPS & TOOLS

Watch the Weather Closely: Be sure the day you choose to install your building is dry and calm. Do ***NOT*** attempt to assemble your building on a windy day. Be careful on wet or muddy ground.

Use Teamwork: Two or more people are required to assemble your building. One person can hold the parts or panels in place while the other person fastens them together and handles the tools. This makes the process of assembling your building faster and safer.

Tools and Materials: Here is a list of some basic tools and materials you will need to assemble your building. Decide which method of anchoring and the type of base you will use to make a complete list of the materials you will need.

WHAT YOU NEED

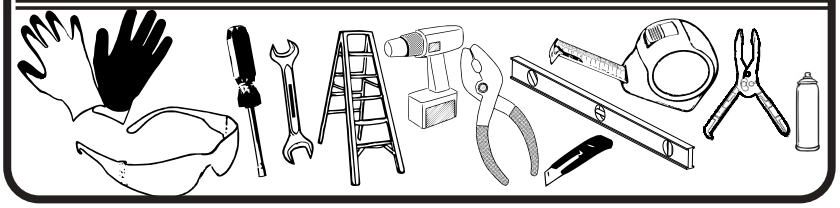

- **Work Gloves**
- **Safety Glasses**
- **Nut Driver or Wrench**
- **Step Ladder 8’**
- **Power Drill (Cordless, Variable Speed)**
- **Pliers**
- **Utility Knife or Scissors**
- **Carpenter’s Level**
- **Tape Measure**
- **Clamp**
- **Spray Lubricant**

RECOMMENDED TIME SAVERS

- **Square**
- **String (for squaring the frame)**
- **Awl (to align holes)**

BASE PREPARATION TOOLS

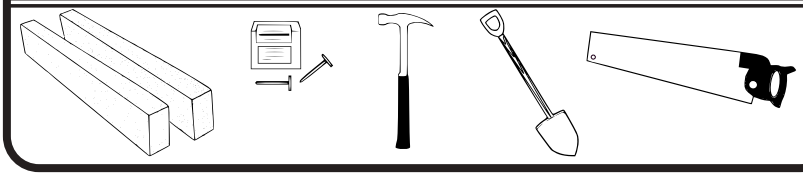

- **Lumber and/or Concrete**
- **Hammer and Nails**
- **Spade or Shovel**
- **Hand Saw or Power Saw**

How to Select and Prepare Your Building Site: Before you start to assemble your building, you will want to decide on a good location. The best location is a level area with good drainage.

- Allow enough working space so it is not difficult to move parts into position for assembly. Also, there needs to be enough space outside the building to be able to fasten the panel screws from the outside.

- Before assembling any parts, your base should be constructed and an anchoring system should be ready to use.

Base

The Base For Your Building

Concrete Slab

The slab should be at least 4" (10,2 cm) thick. It must be level and flat to provide good support for the frame. The following are the recommended materials for your base.

- 2 x 4's (38 mm x 89 mm) (will be removed once the concrete cures)
- Concrete Sheet of 6 mil plastic
- We recommend for a proper strength concrete to use a mix of:
  1 part cement 3 parts pea sized gravel 2 1/2 parts clean sand

Prepare the Site/Construct a Base

1. Dig a square, 6" (15,2 cm) deep into the ground (remove grass).
2. Fill up to 4" (10,2 cm) in the square with gravel and tamp firm.
3. Cover gravel with a sheet of 6 mil plastic.
4. Construct a wood frame using four planks of 2x4 (38 mm x 89 mm) lumber.
5. Pour in concrete to fill in the hole and the frame giving a total of 4" (10,2 cm) thick concrete. Be sure surface is level.

Allow 3 - 5 hours for construction and a week for concrete curing time.

Note: Before beginning construction, check local building codes regarding footings, location and other requirements.

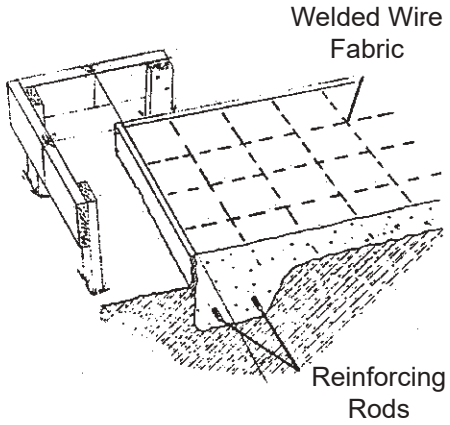

Optional Footer Type of Foundation

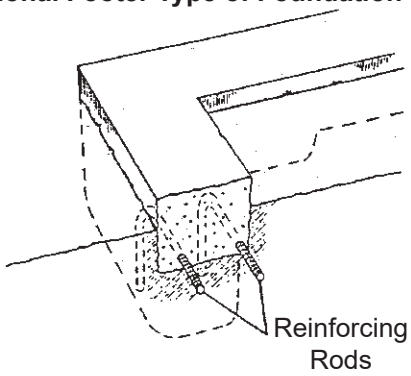

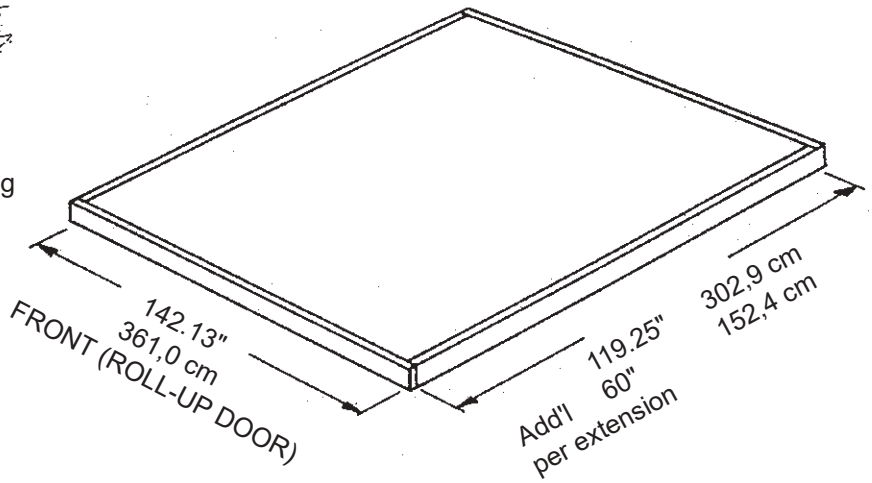

Note: Finished Slab dimensions, with lumber removed.

Anchoring

Anchoring Down The Building

It is important that the entire floor frame be anchored after the building is erected.
Below are recommended ways of anchoring.

Anchoring into Concrete:
For poured concrete slab or footing or patio blocks:
Use 1/4" x 2" (6 mm x 51 mm) Lag Screws.

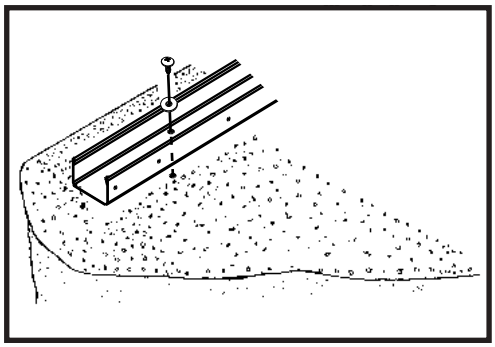

Anchoring into Wood:
Use 1/4" (6 mm) Wood Screws. There are 1/4" (6 mm) dia. holes provided in the frames for proper anchoring.

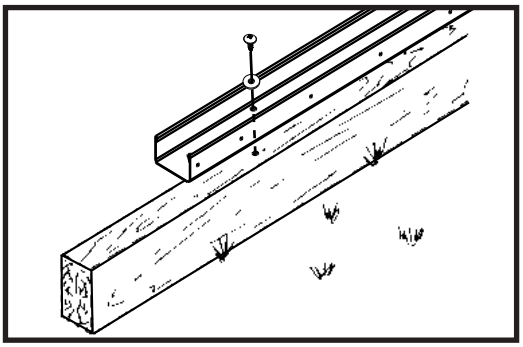

HARDWARE LIST...

Key No.	Part No.	Part Description	Qty.	✓ List
1	65103	Hex Nut (#8-32)	18	
2	65101	Square Nut (1/4-20)	10	
3	65106	Square Nut (#10-32)	240	
4	65943	Bolt (Bare) (#10-32 x 7/16) (10 mm)	140	
5	65943	Bolt (Wall Color) (#10-32 x 7/16) (10 mm)	64	
6	65943	Bolt (Roof Color) (#10-32 x 7/16) (10 mm)	36	
7	66783	Flathead Bolt (#8-32x1/2)	18	
8	66611	Tapping Screw (Bare) (#10AB x 1/2) (13 mm)	244	
9	66611	Tapping Screw (Wall Color) (#10AB x 1/2) (13 mm)	380	
10	66611	Tapping Screw (Roof Color) (#10AB x 1/2) (13 mm)	246	
11	65989	Hex Head Bolt (#1/4-20x1/2)	10	
12	65020	Flat Washer	8	
13	66646	Washer Sheet	18	
14	6228	Track Support	2	
15	60H	Corner Cap	4	
16	30026	Peak Cap	2	
17	30005	VHB Tape	1	
18	30018	Alcohol Wipe Packet	2	
19	66609	Hinge	3	
20	7003	Left Shear Plate	6	
21	7004	Right Shear Plate	6	
22	7022	Eave Bracket	4	
23	804860	Self-Drilling Screw	8	
24	30032	Nameplate	1	

Key No.	Part No.	Part Description — Extension 1205M	Qty.	✓ List
3	65106	Square Nut (#10-32)	44	
4	65943	Bolt (Bare) (#10-32 x 7/16) (10 mm)	34	
6	65943	Bolt (Roof Color) (#10-32 x 7/16) (10 mm)	10	
8	66611	Tapping Screw (Bare) (#10AB x 1/2) (13 mm)	132	
9	66611	Tapping Screw (Wall Color) (#10AB x 1/2) (13 mm)	90	
10	66611	Tapping Screw (Roof Color) (#10AB x 1/2) (13 mm)	128	
13	66646	Washer Sheet	6	
14	6228	Track Support	2	
20	7003	Left Shear Plate	6	
21	7004	Right Shear Plate	6	
22	7022	Eave Bracket	4	

Hardware Views by Key No.

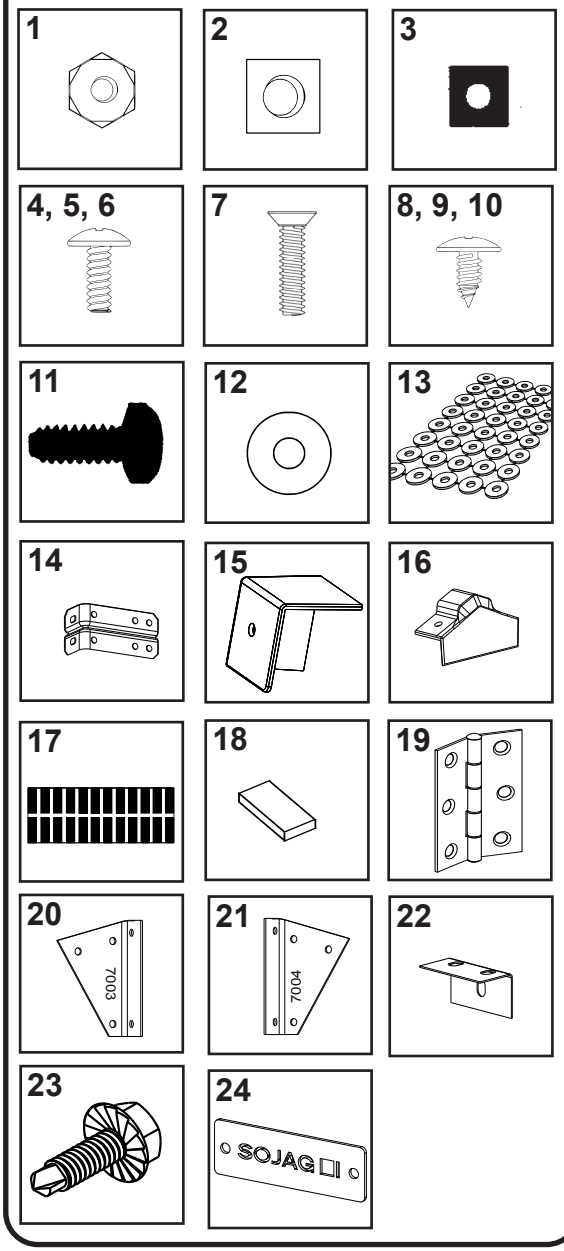

The fasteners used in each step are shown actual size at the top of each page. If you are unsure which fastener to use, hold it up to the picture and use the one that matches.

BB - Bare Bolt
WB - Wall Bolt
RB - Roof Bolt
BS - Bare Screw
WS - Wall Screw
RS - Roof Screw
N - Nut
W - Washer

PARTS LIST...

Assembly Part Key No.		Part Number	Description	C1	C2	C3	Extension 1205M
	1	6372	Gable Strut			2	
	2	6380	Gable Brace Outer			4	
	3	6381	Gable Brace Mid			4	
	4	6382	Gable Brace Center			2	
	5	7942	Right Gable		2		
	6	7943	Left Gable		2		
	7	11446	Ridge Beam			12	
	8	11150	Right Rear Frame			2	
	9	11151	Frame, Side Floor			2	
	10	11152	Channel, Side Wall	2			
	11	11153	Panel, Wall Corner Narrow	4			
	12	11447	Ridge Beam				6
	13	11155	Floor Side Frame				2
	14	11156	Corner Support Structural			8	
	15	11157	Panel, Wall Full		10		4
	16	11158	Frame, Front Floor			3	
	17	11159	Channel, Side Wall				2
	18	11160	Panel, Wall Half	1			
	19	11161	Header Angle		2		
	20	11439	Channel, Header			2	
	21	11163	Channel, Mid Wall				2
	22	11165	Channel, Mid Wall			2	
	23	11166	Panel, Wall Half	3			2
	24	11168	Panel, Wall Corner	4			
	25	11169	Panel, Wall Half	1			
	26	11170	Panel, Wall Full		1		
	27	11171	Panel, Jamb Left		1		
	28	11172	Panel, Wall Full		4		
	29	11173	Panel, Wall Half	1			
	30	11174	Panel, Roof Full		8		4
	31	11175	Panel, Roof Half				2
	32	11176	Channel, Side Door	1			
	33	11177	Door Stop	2			
	34	11178	Panel, Roof Corner Right	2			
	35	11179	Column, Front			2	

PARTS LIST...

Assembly Part Key No.		Part Number	Description	C1	C2	C3	Extension 1205M
	36	11180	Frame, Rear Right			1	
	37	11181	Header Angle Side		1		
	38	11182	Panel, Jamb Right	1			
	39	11183	Track Strut			2	
	40	11184	Frame, Side			1	
	41	11185	Panel, Jamb Right		1		
	42	11186	Truss, Column	3			2
	43	11187	Chord, Truss Upper	2			2
	44	11436	Chord, Truss Lower Outside	2			2
	45	11435	Chord, Truss Lower	1			1
	46	11434	Chord, Diagonal Outer	2			2
	47	11191	Chord, Truss Upper	2			2
	48	11437	Chord, Truss Diagonal	2			2
	49	11193	Panel, Door		1		
	50	11195	Door Brace, Vertical	2			
	51	11196	Channel, Door Horizontal	2			
	52	11197	Support, Door Track			4	
	53	11200	Panel, Door Back		1		
	54	11201	Lintel			1	
	55	11202	Ridge Cap Outside		2		
	56	11203	Trim, Side Roof Inside				2
	57	11204	Trim, Side Roof Outside	4			
	58	11205	Ridge Cap Inside				1
	59	11207	Panel, Wall Half	1			
	60	11290	Support, Right Track			1	
	61	11291	Lintel	1			
	62	11292	Ramp			1	
	63	30002	Handle, Side Door Assembly			1	
	64	80141	Frame, Side Floor Left			2	
	65	80143	Channel, Side Wall Left	2			
	66	80145	Frame, Front Floor Left			3	
	67	80147	Channel, Mid Wall Left			1	
	68	80149	Frame, Rear Left			1	
	69	80151	Panel, Roof Corner Left	2			
	70	80153	Panel, Jamb Left	1			
	71	80159	Left Rear Frame			2	
	72	80161	Panel, Wall Half	1			
	73	80191	Support, Left Track			1	
	74	11445	Strut, Gable			2	2
	75	11438	Channel, Header Support			1	
	76	69835	Edge Trim (Green)		4		

Components for Garage Door (GD)

#1 End Hinge ②	#2 End Hinge ②	#3 End Hinge ②
#1 Center Hinge ③	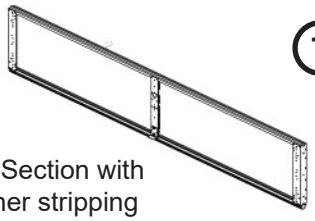 ① Door Section with weather stripping	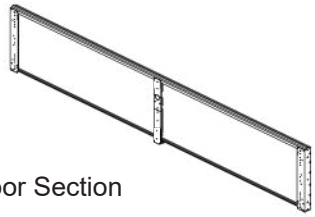 ③ Door Section
Inside Step Plate 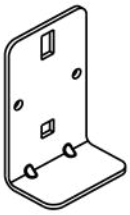 ①	Roller ⑩ 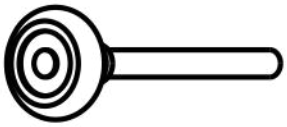	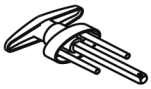 ① 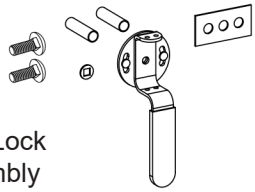 Door Lock Assembly
Bottom Fixture Left 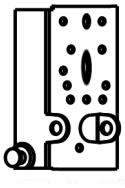 ①	Bottom Fixture Right 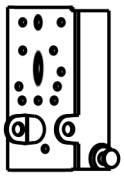 ①	Top Fixture 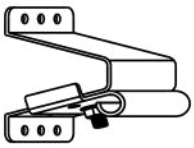 ②
	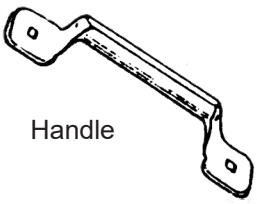 ① Handle	

Components for Garage Door (GD)

Snap Latch ②	Snap Latch Keeper ②	Cable ①
Flag Angle Left ①	Flag Angle Right ①	Vertical Track ②
Track Bracket ④	Horizontal Curve Track Left ①	Horizontal Curve Track Right ①
Extension Spring ②	Safety Cable ②	Spring Cable ②
S Hook (Red) ②	Cable Clip (Red) ②	Pulley ④
Clevis ②	Eye Bolt & Hex Nut (Red) ②	Horizontal Angle Bracket ②

Hardware for Garage Door (GD)

5/16” x 3/4” Bolt and Hex Nut (2)	1/4” x 5/8” Track Bolt & Hex Nut (23)	1/4” Sheet Metal Screw (48)
	1/4” Sheet Metal Screw (Red) (4)	3/8” x 1-1/2” Bolt and Hex Nut (Red) (4)
3/8” x 3/4” Carriage Bolt & Hex Nut (2)		

ASSEMBLY OVERVIEW

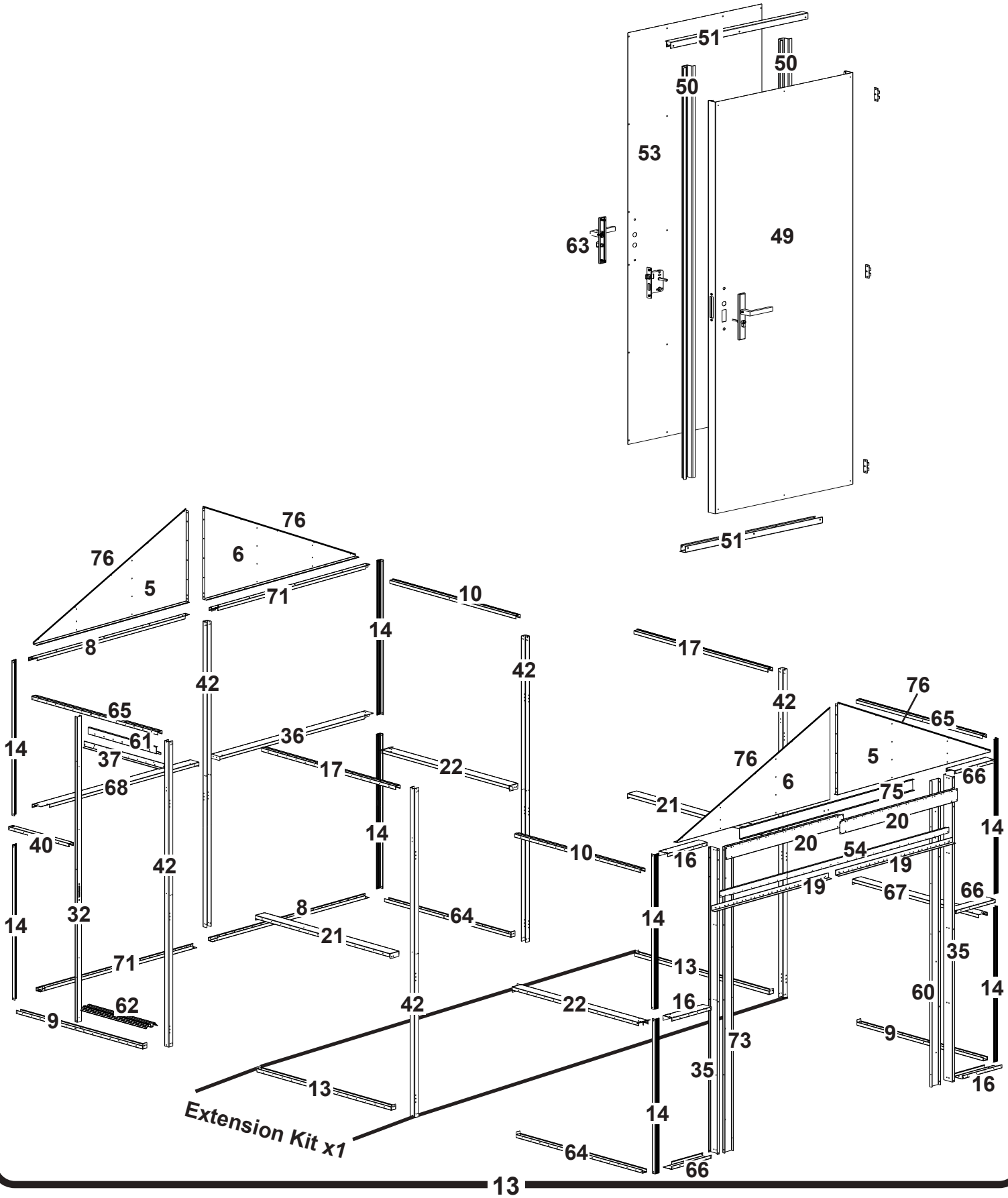

ASSEMBLY OVERVIEW

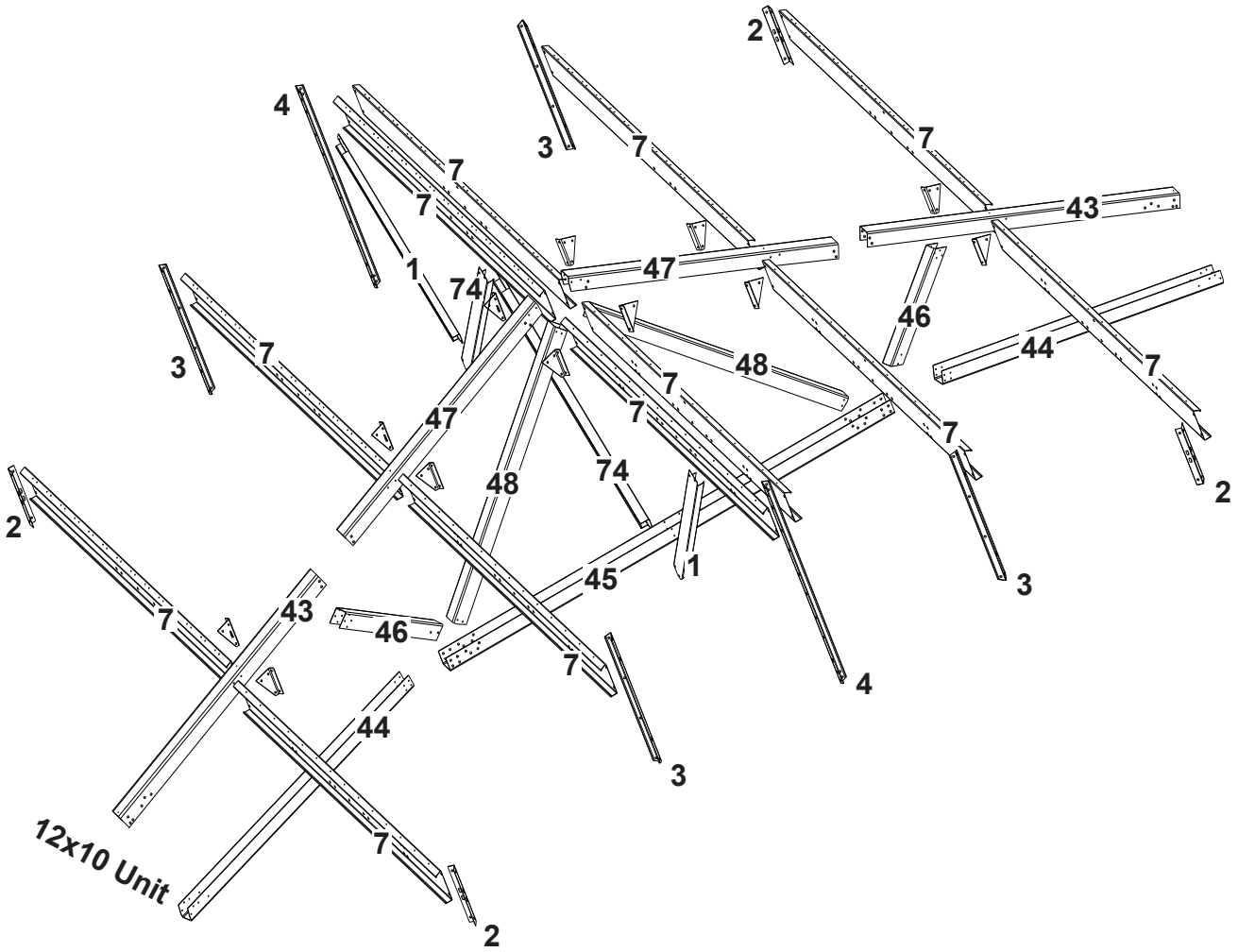

12x10 Unit

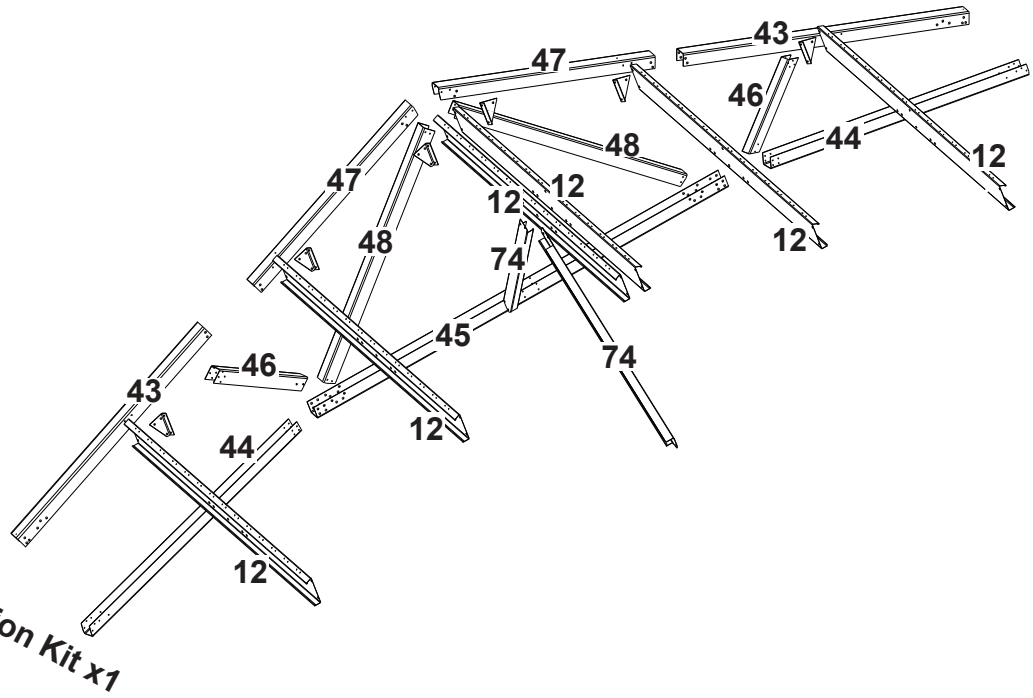

Extension Kit x1

ASSEMBLY OVERVIEW

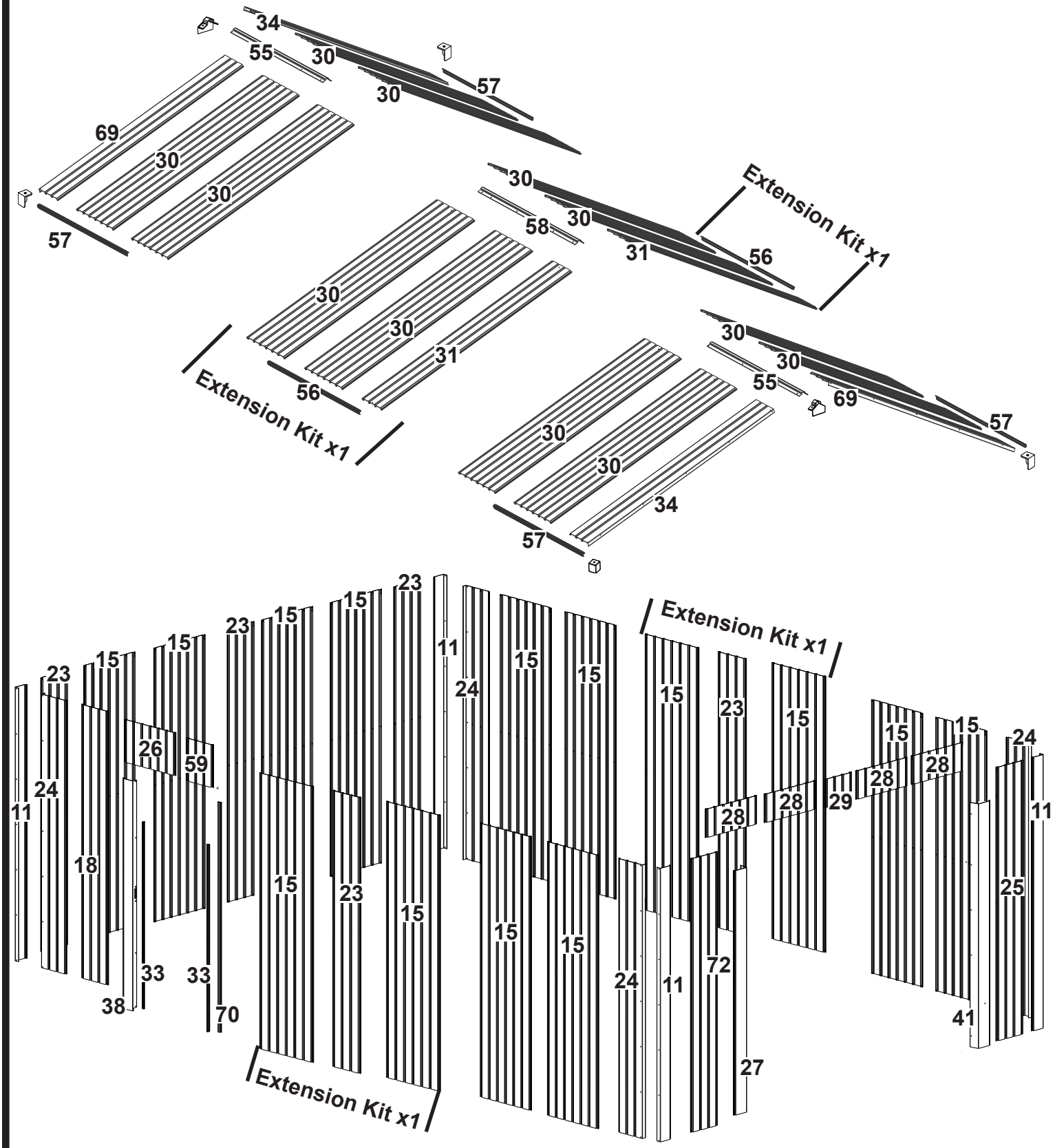

Step 1A

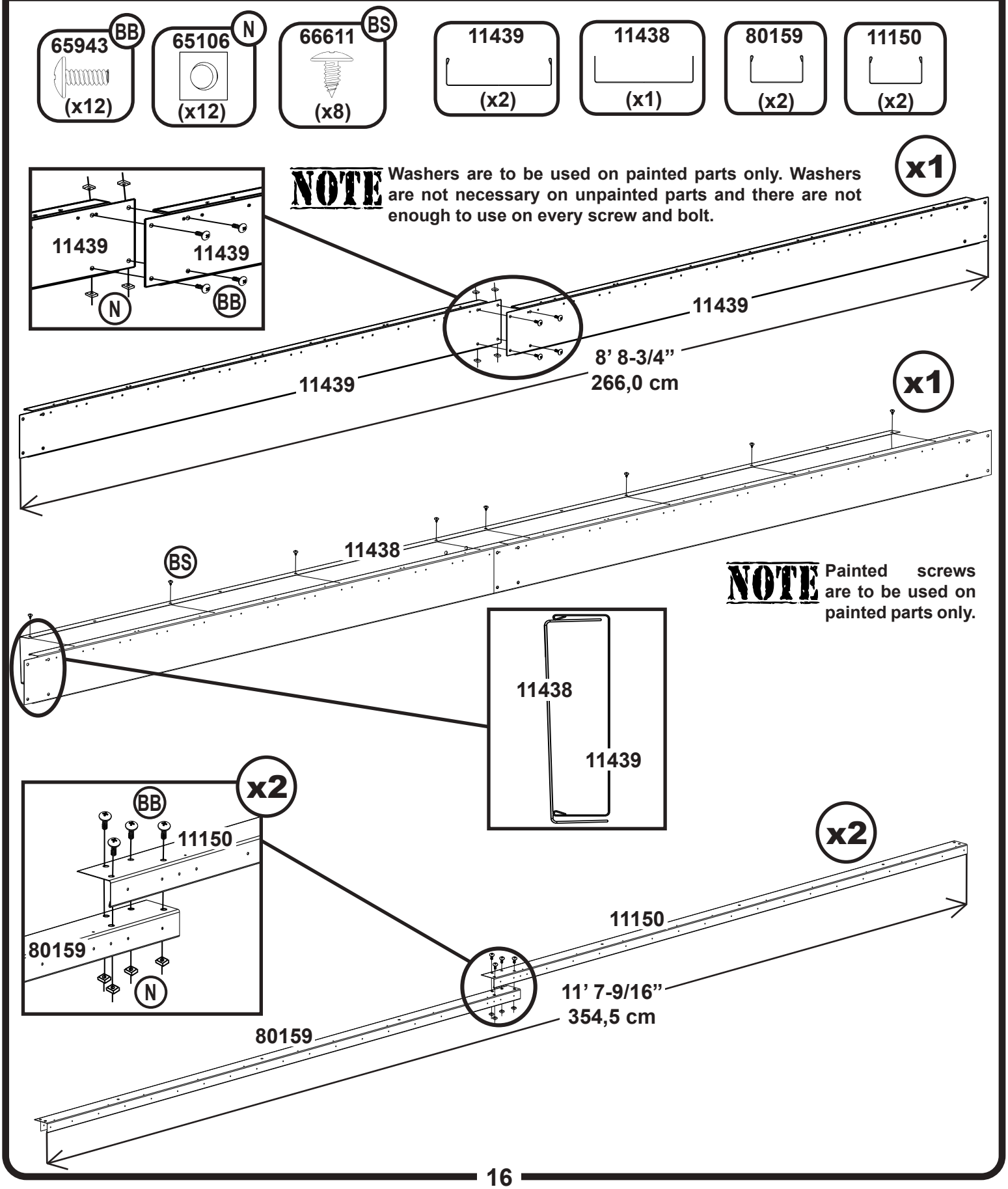
65943
BB
(x12)
65106
N
(x12)
66611
BS
(x8)
11439
(x2)
11438
(x1)
80159
(x2)
11150
(x2)
NOTE
Washers are to be used on painted parts only. Washers are not necessary on unpainted parts and there are not enough to use on every screw and bolt.
x1
11439
11439
N
BB
11439
8' 8-3/4"
266,0 cm
11439
x1
11438
BS
NOTE
Painted screws are to be used on painted parts only.
11438
11439
x2
BB
11150
80159
N
x2
11150
11' 7-9/16"
354,5 cm
80159

Step 1B

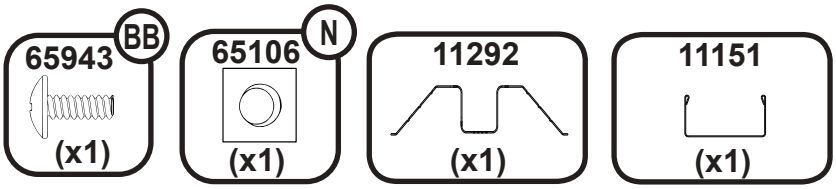

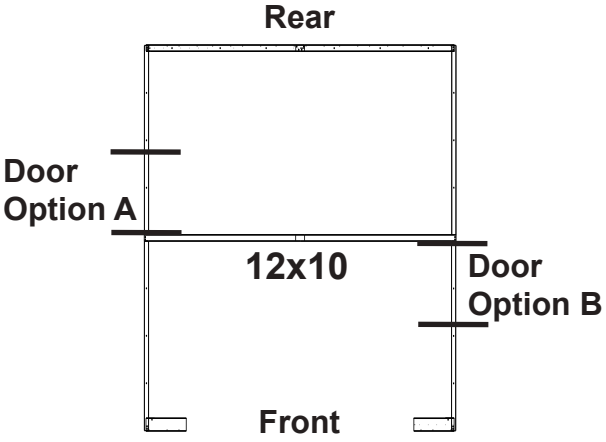

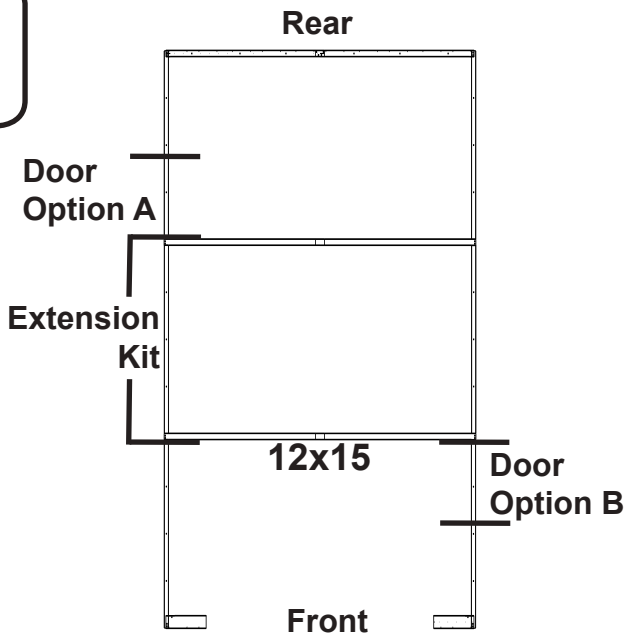

For Door Option A, put the ramp on the left rear frame.

For Door Option B, put the ramp on the right front frame.

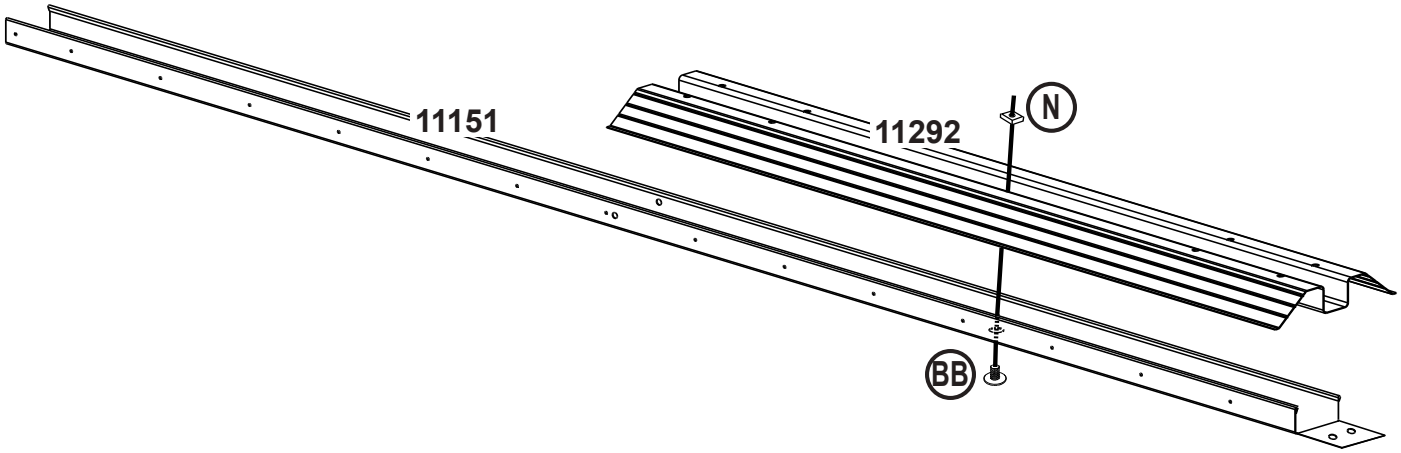

Step 1C

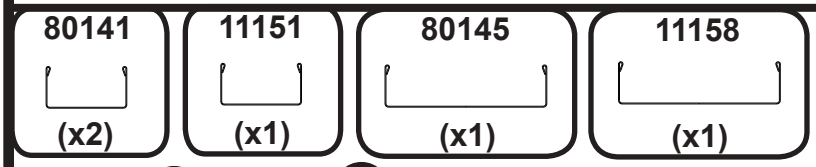

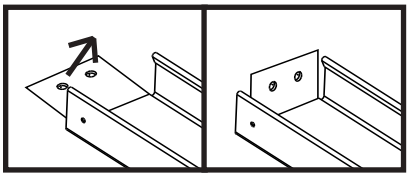

*Bend tabs up for 80141 and 11151

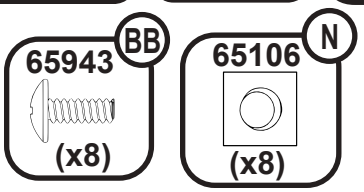

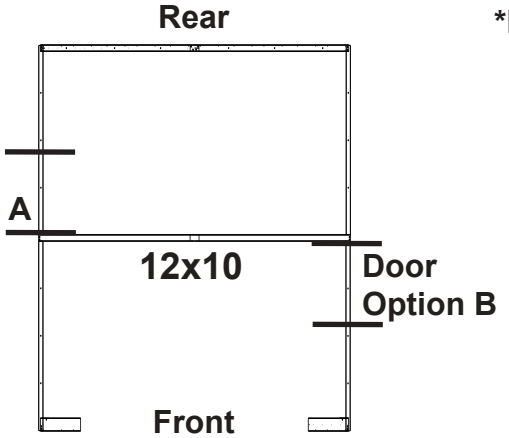

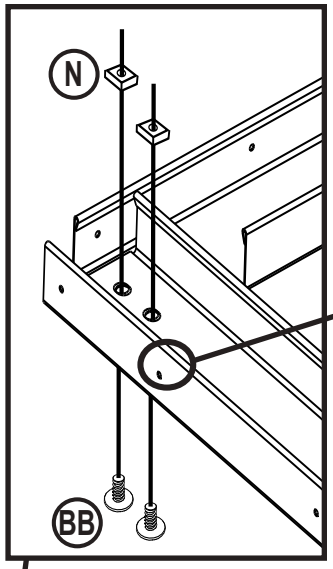

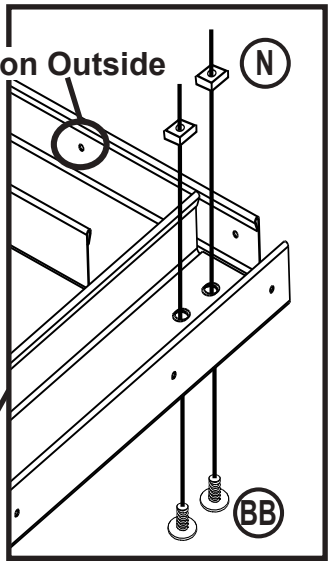

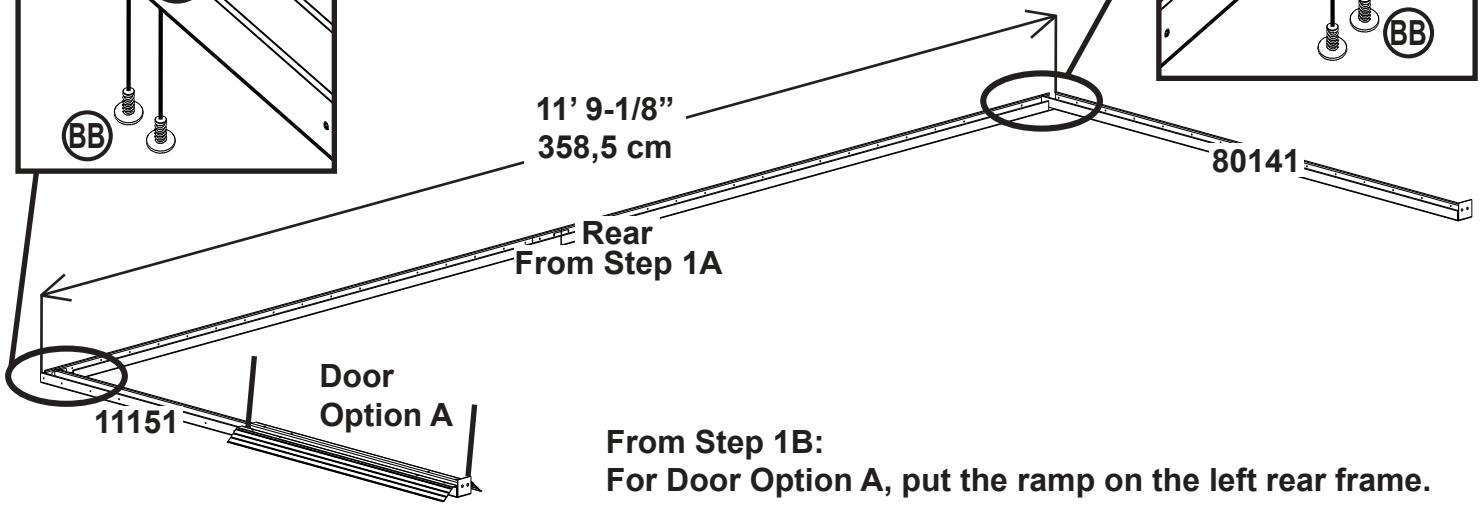

From Step 1B:
For Door Option A, put the ramp on the left rear frame.

For Door Option B, put the ramp on the right front frame.

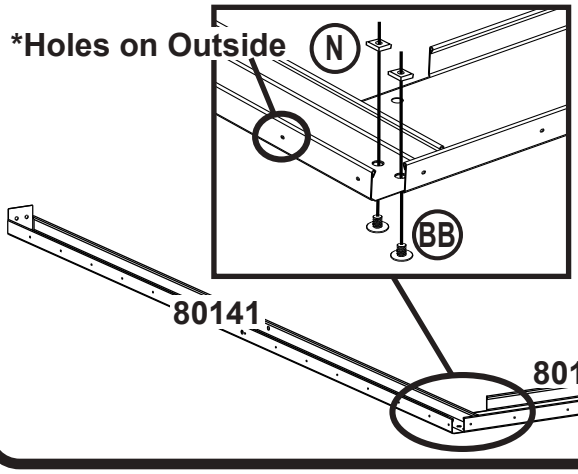

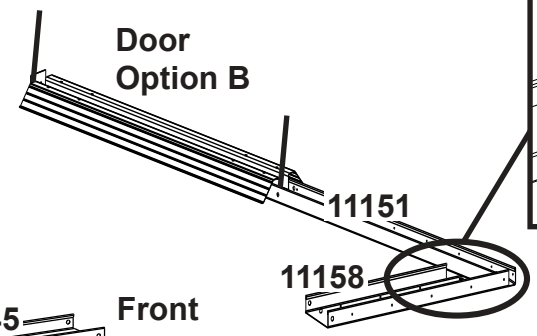

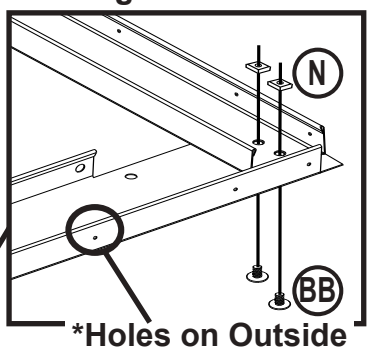

Step 2A

12x10 x1
Extension x1

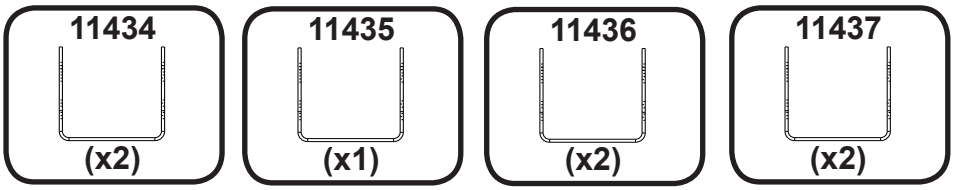

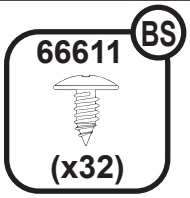

*Lubricate screws to aid assembly

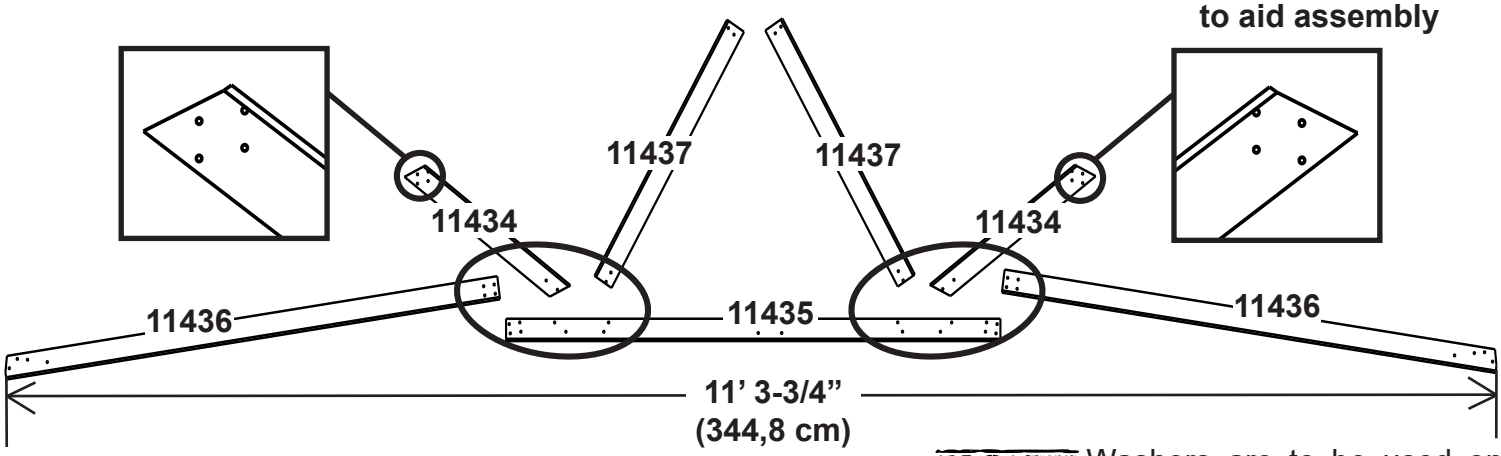

NOTE Washers are to be used on painted parts only. Washers are not necessary on unpainted parts and there are not enough to use on every screw and bolt.

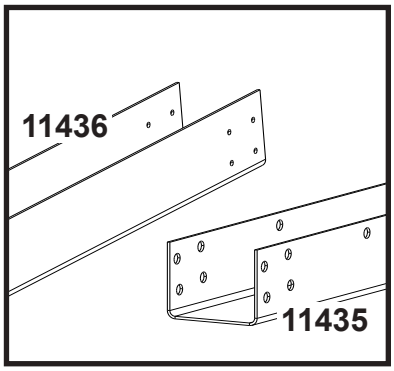

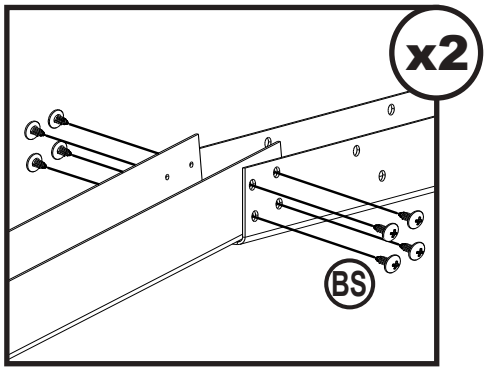

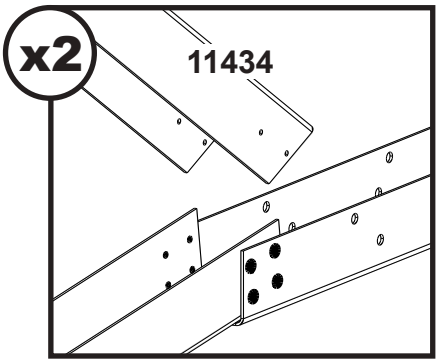

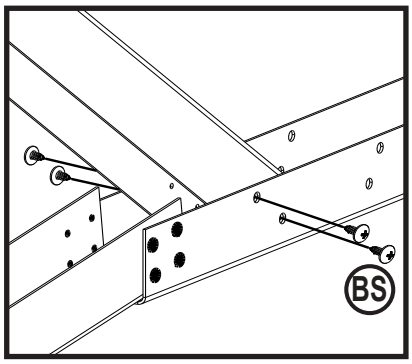

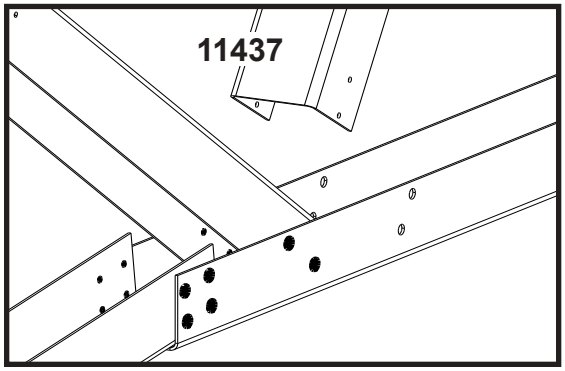

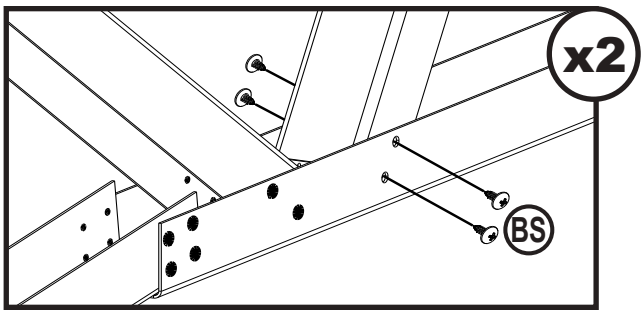

Step 2B

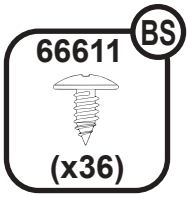

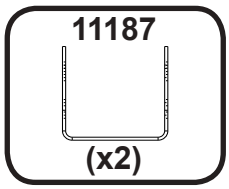

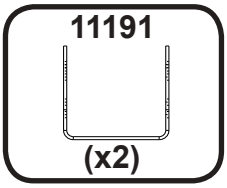

*Lubricate screws to aid assembly

BS
11191
11191
11437
11437

x2
11191
11434
11187
BS

11191
11191
11187
11187

x2
11187
11436
BS

Step 2C

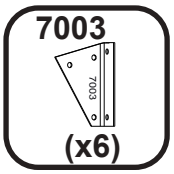

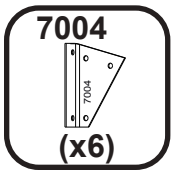

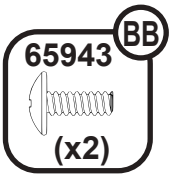

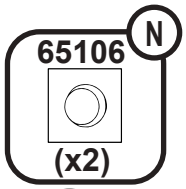

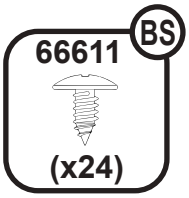

*Lubricate screws to aid assembly

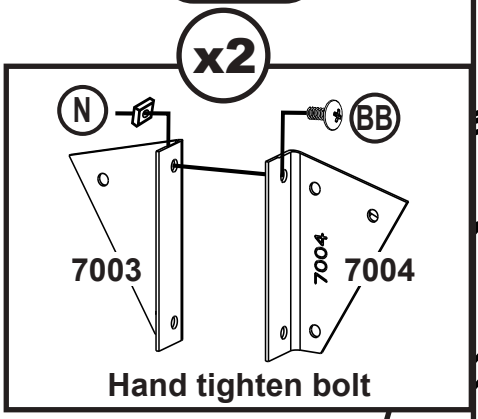

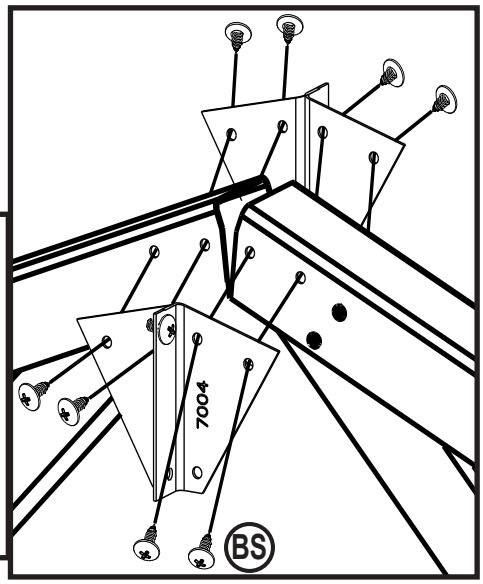

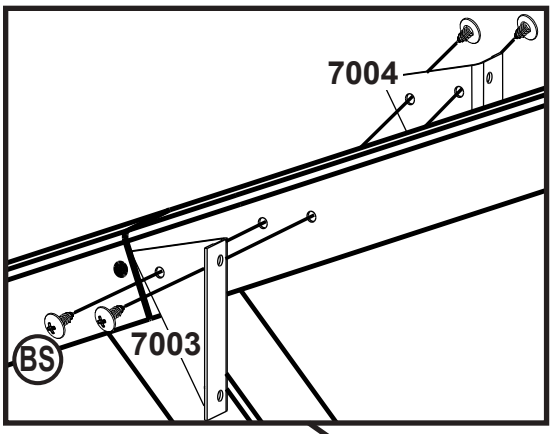

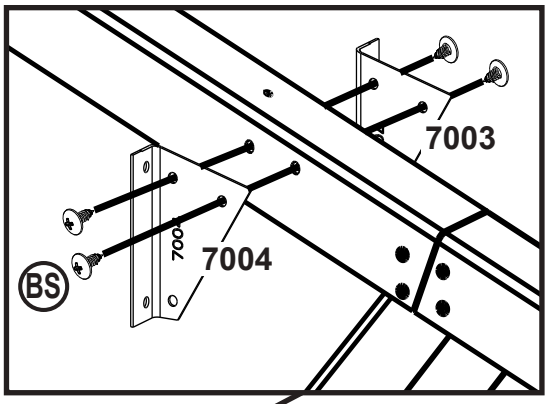

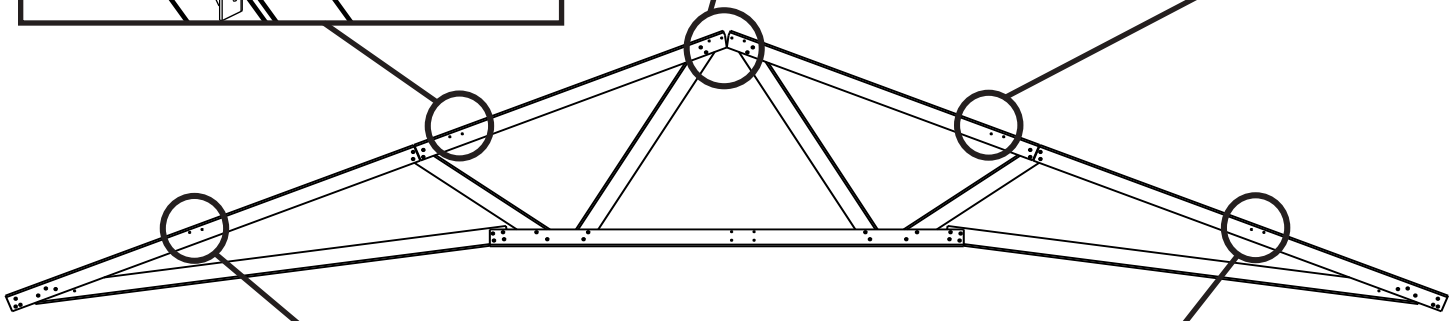

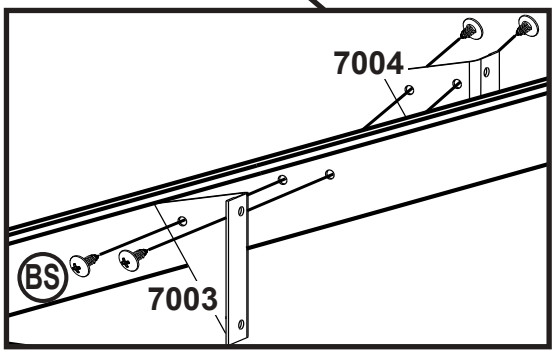

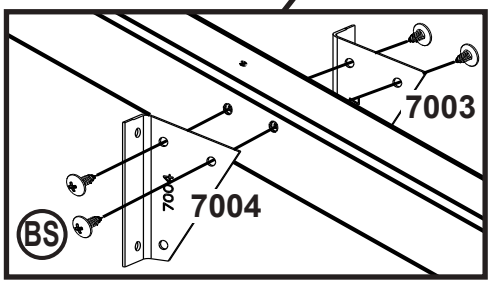

Step 2D

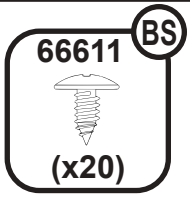

*Lubricate screws to aid assembly

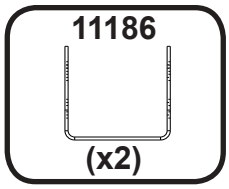

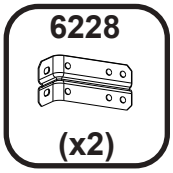

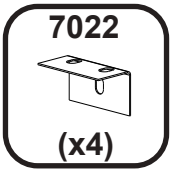

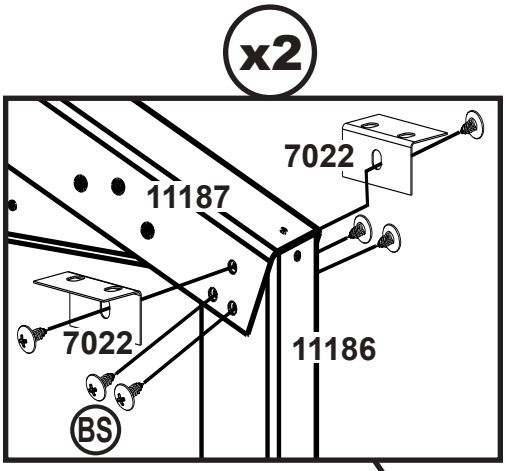

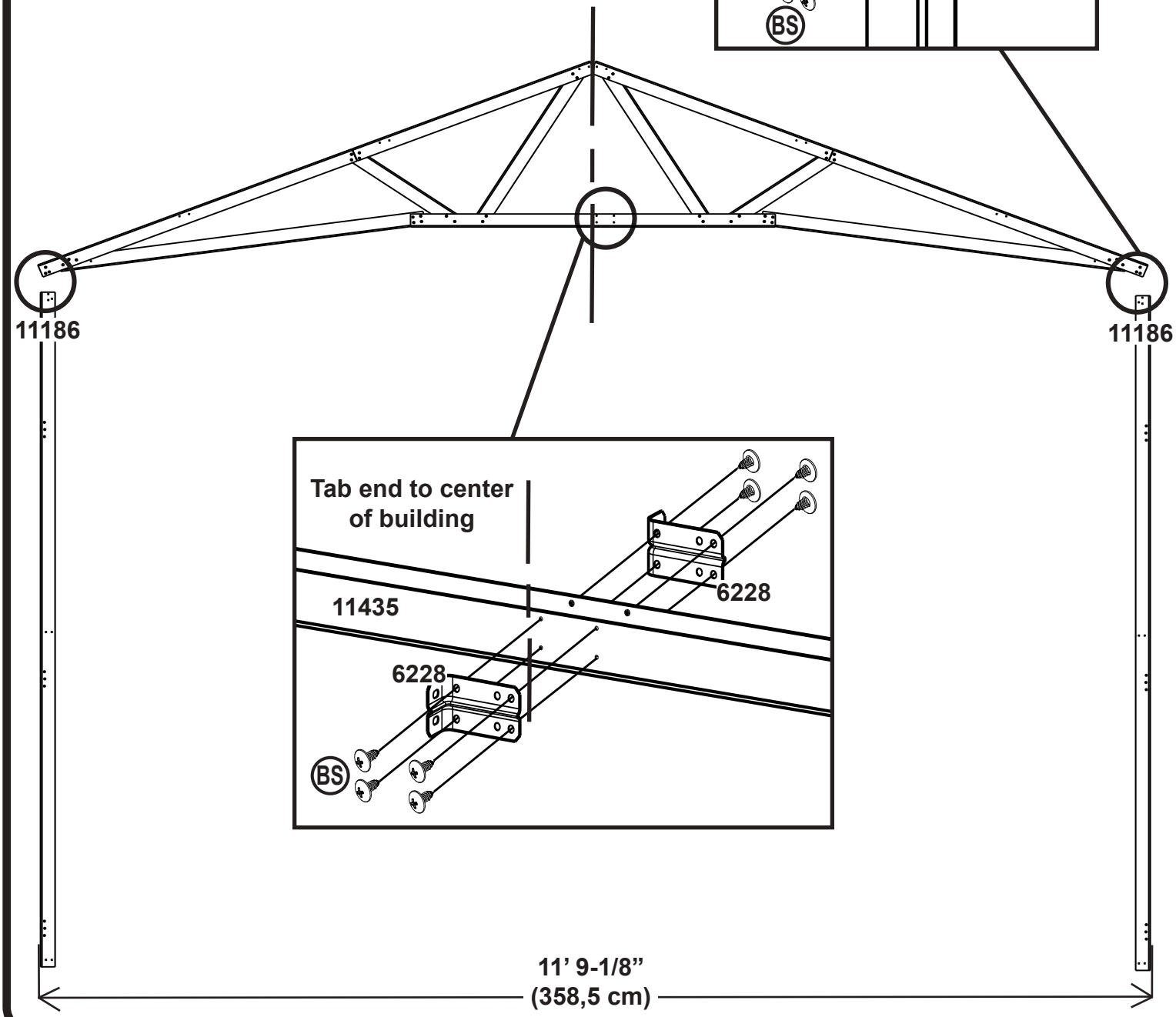

Step 3A

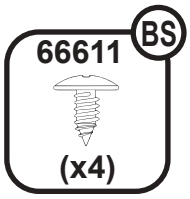

*Lubricate screws to aid assembly

12x10
Skip to Step 6A
pg 29

12x15+
Continue on Next Page

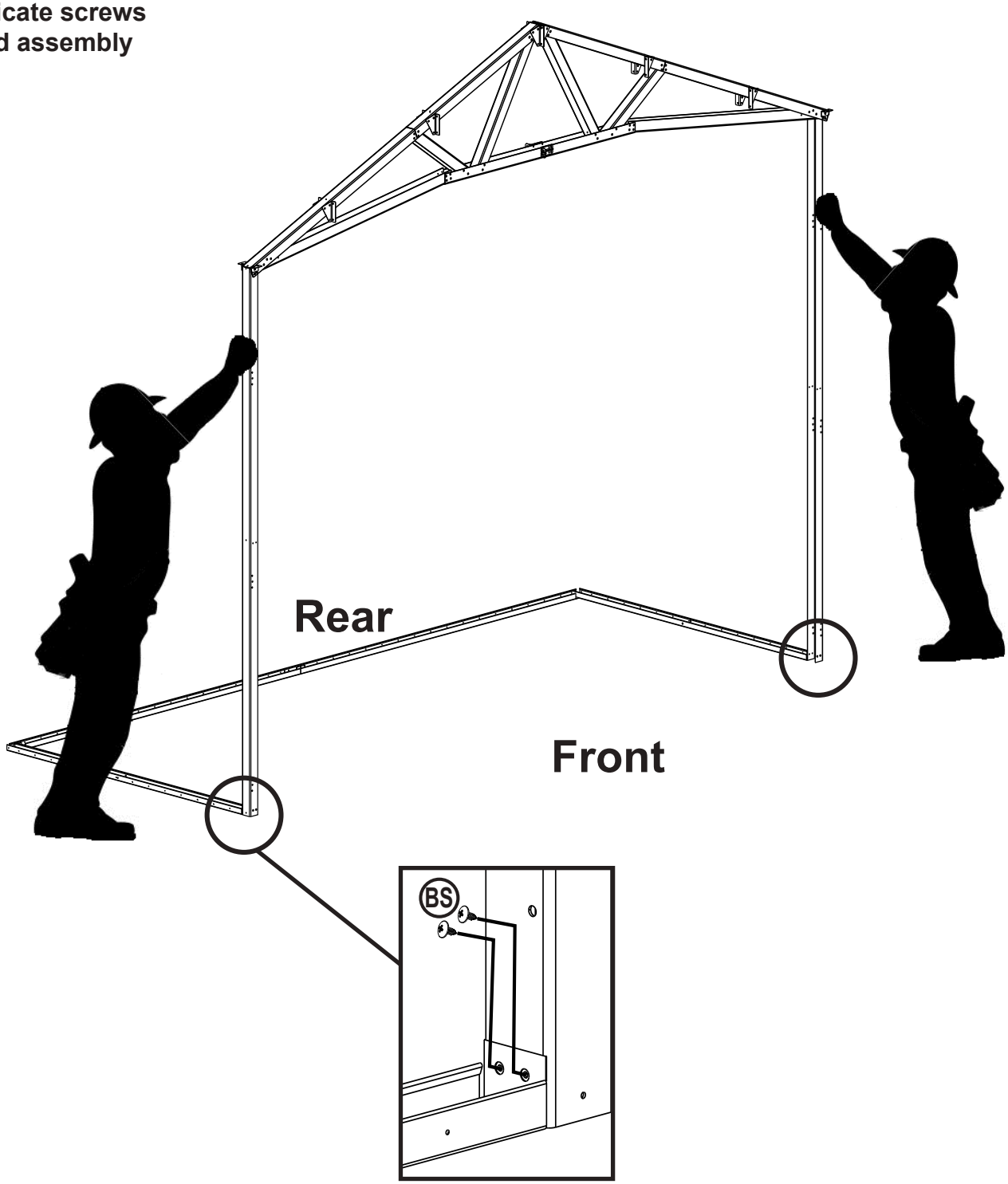

Step 3B

12x15+ Only

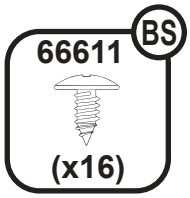

*Lubricate screws to aid assembly

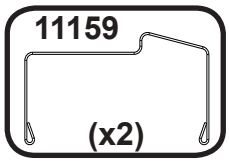

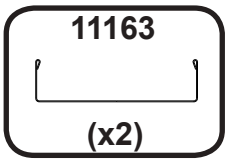

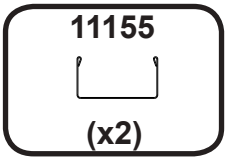

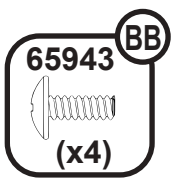

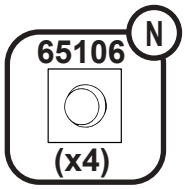

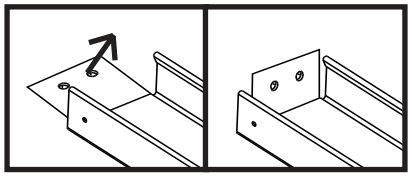

*Bend tabs up for 11163 and 11155

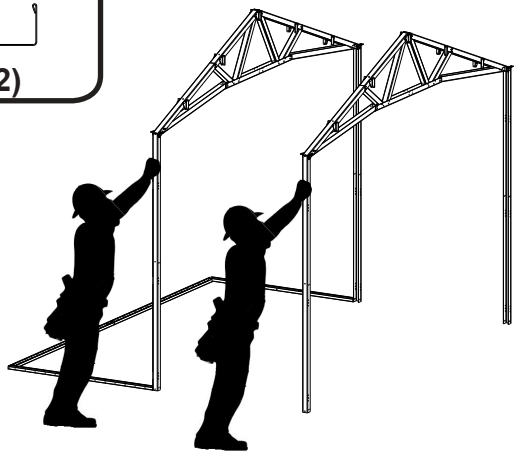

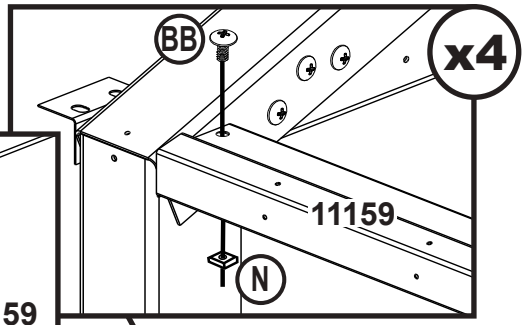

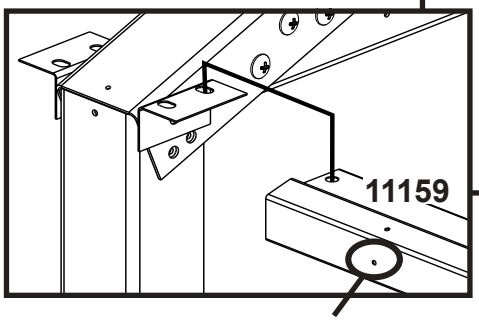

*Holes on Outside

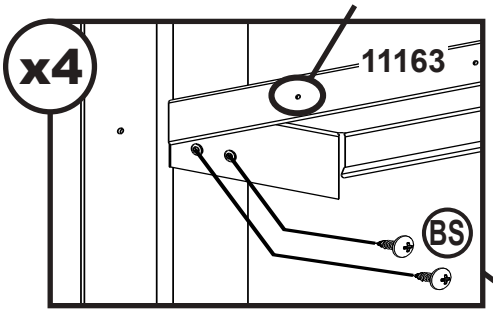

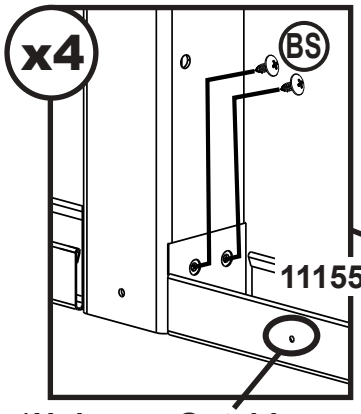

*Holes on Outside

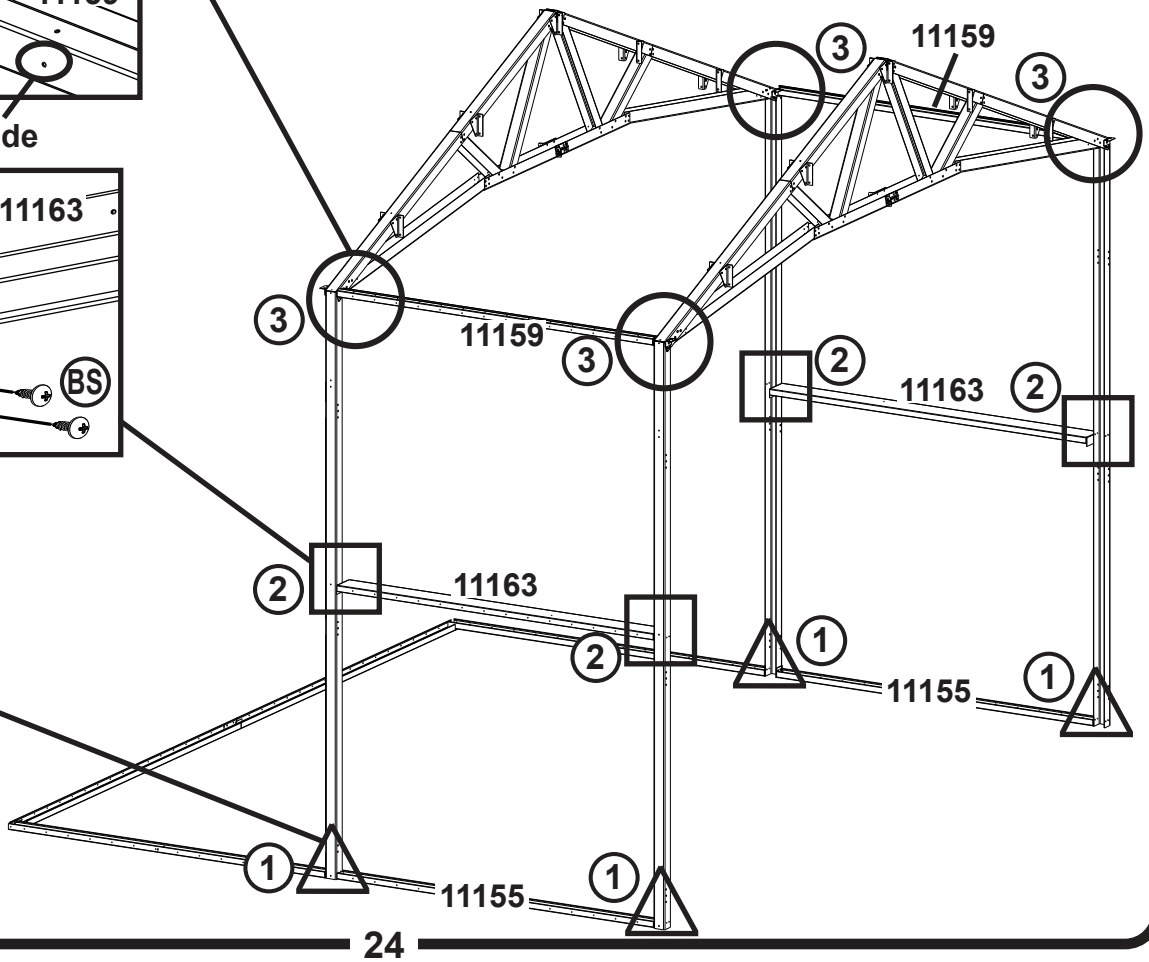

Step 3C

12x15+ Only

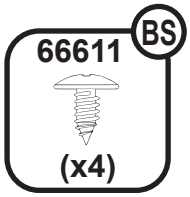

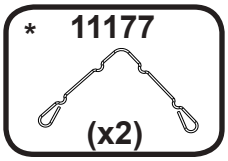

***Lubricate screws to aid assembly**

***11177 is for temporary use in this step and is used in a later step**

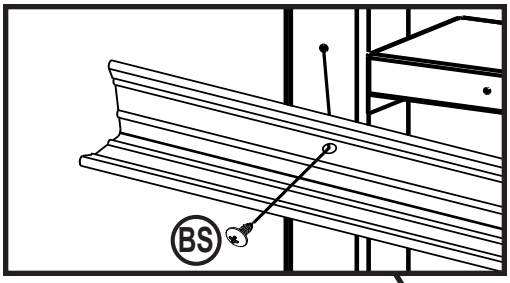

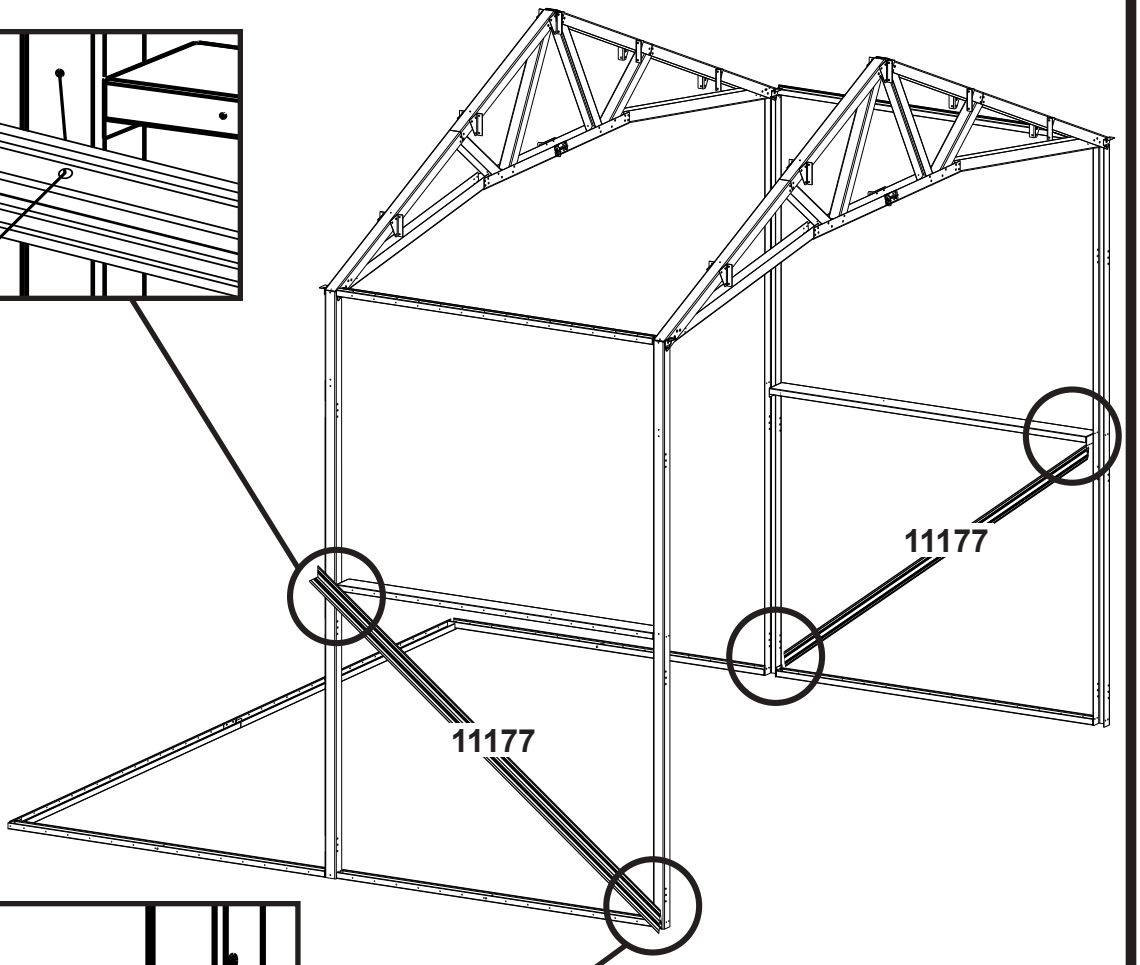

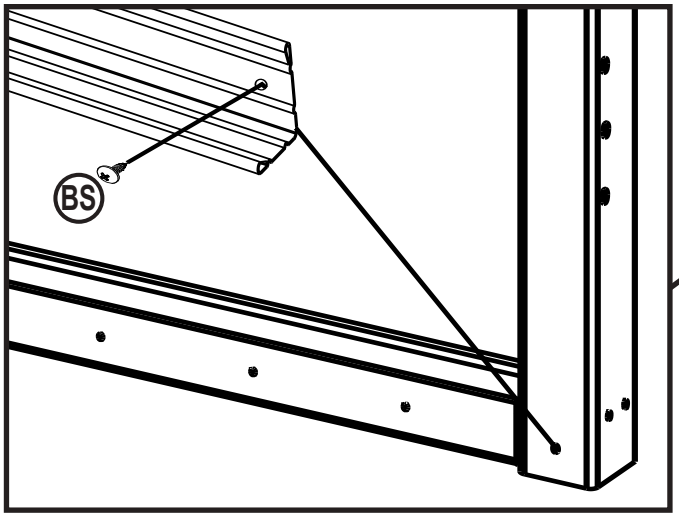

Step 4A

12x15+ Only

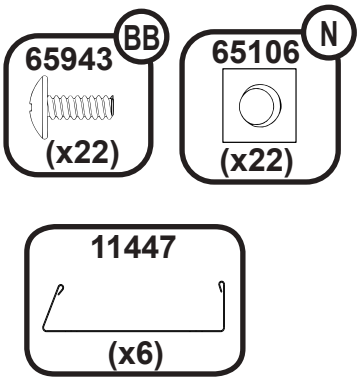

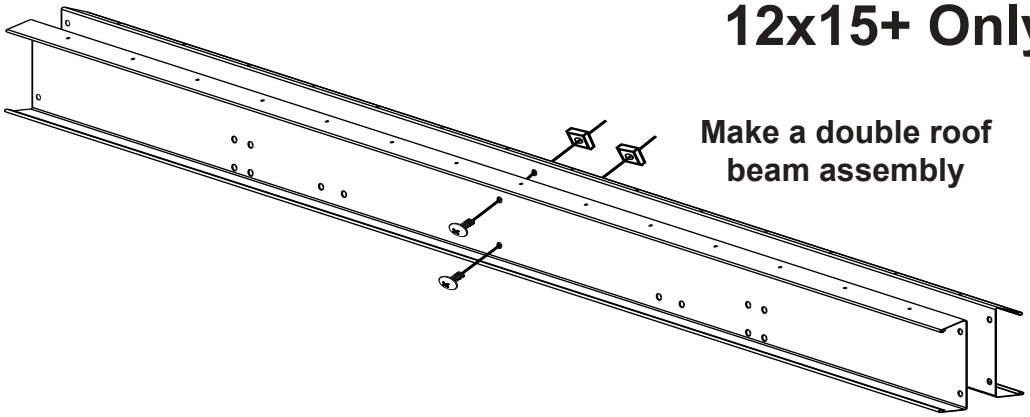

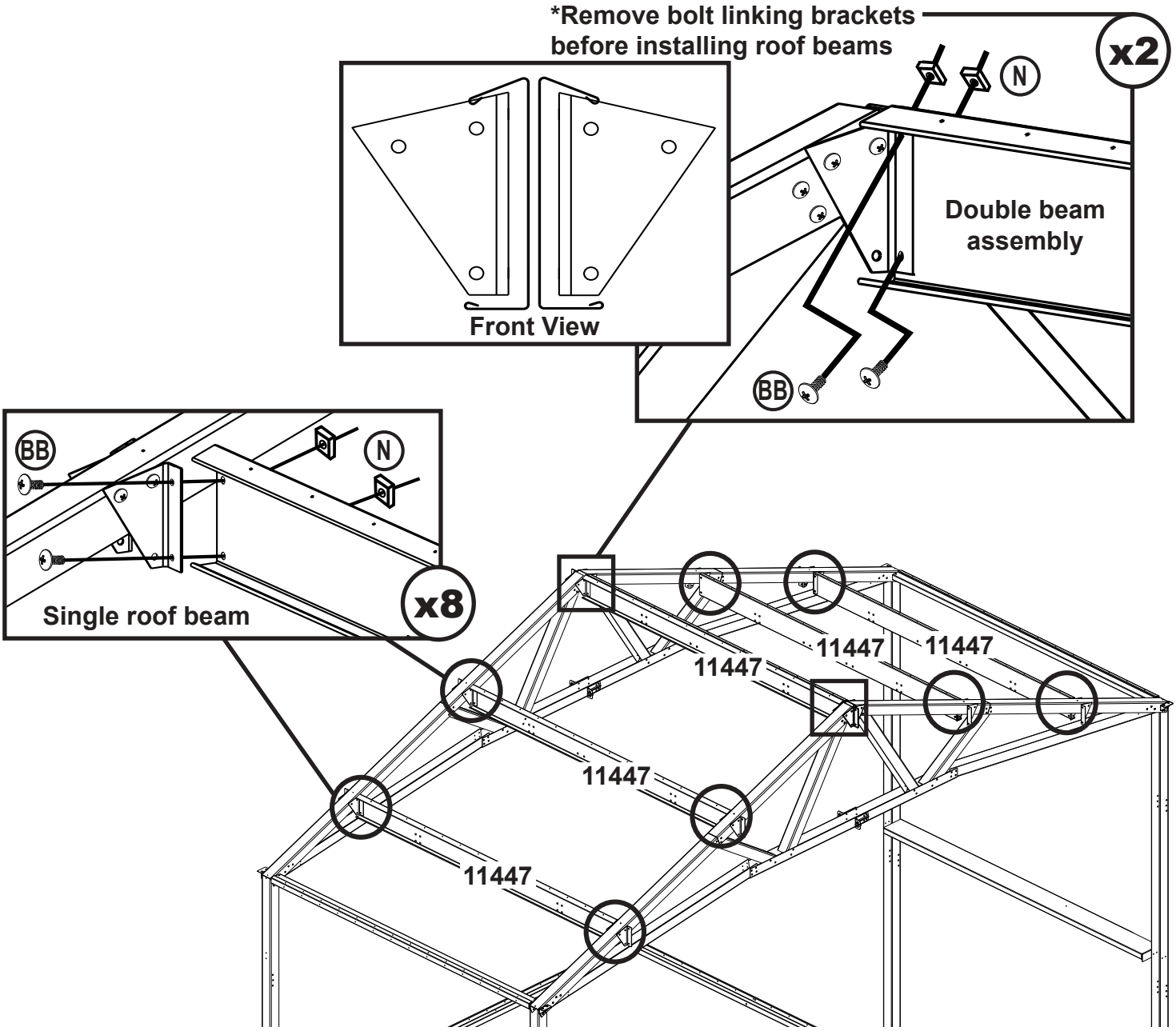

Step 4B

12x15+ Only

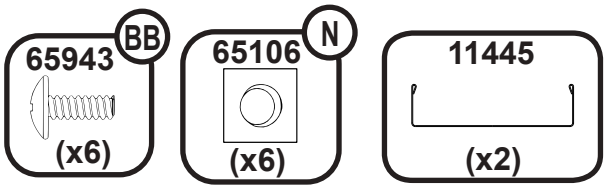

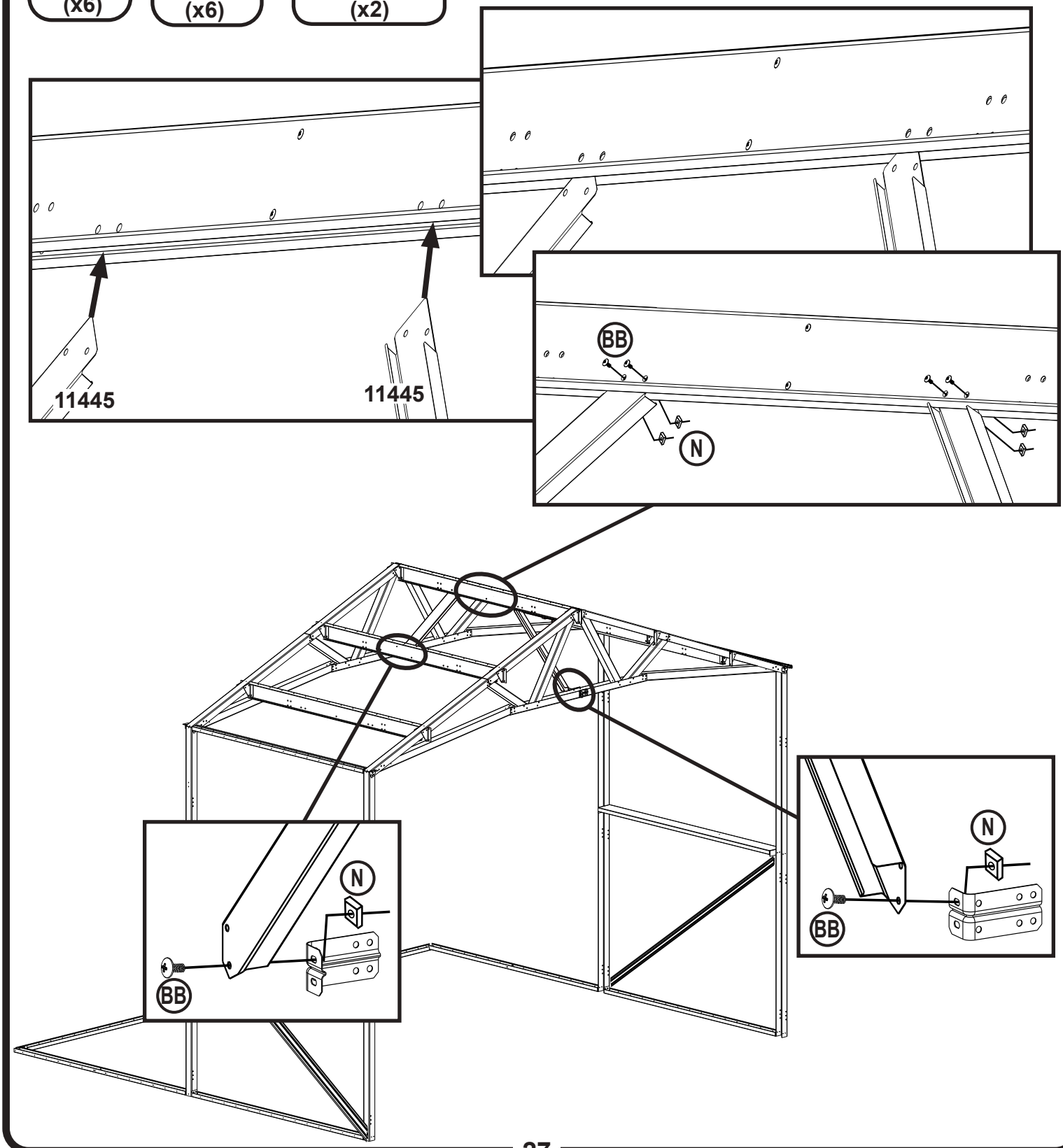

Step 5

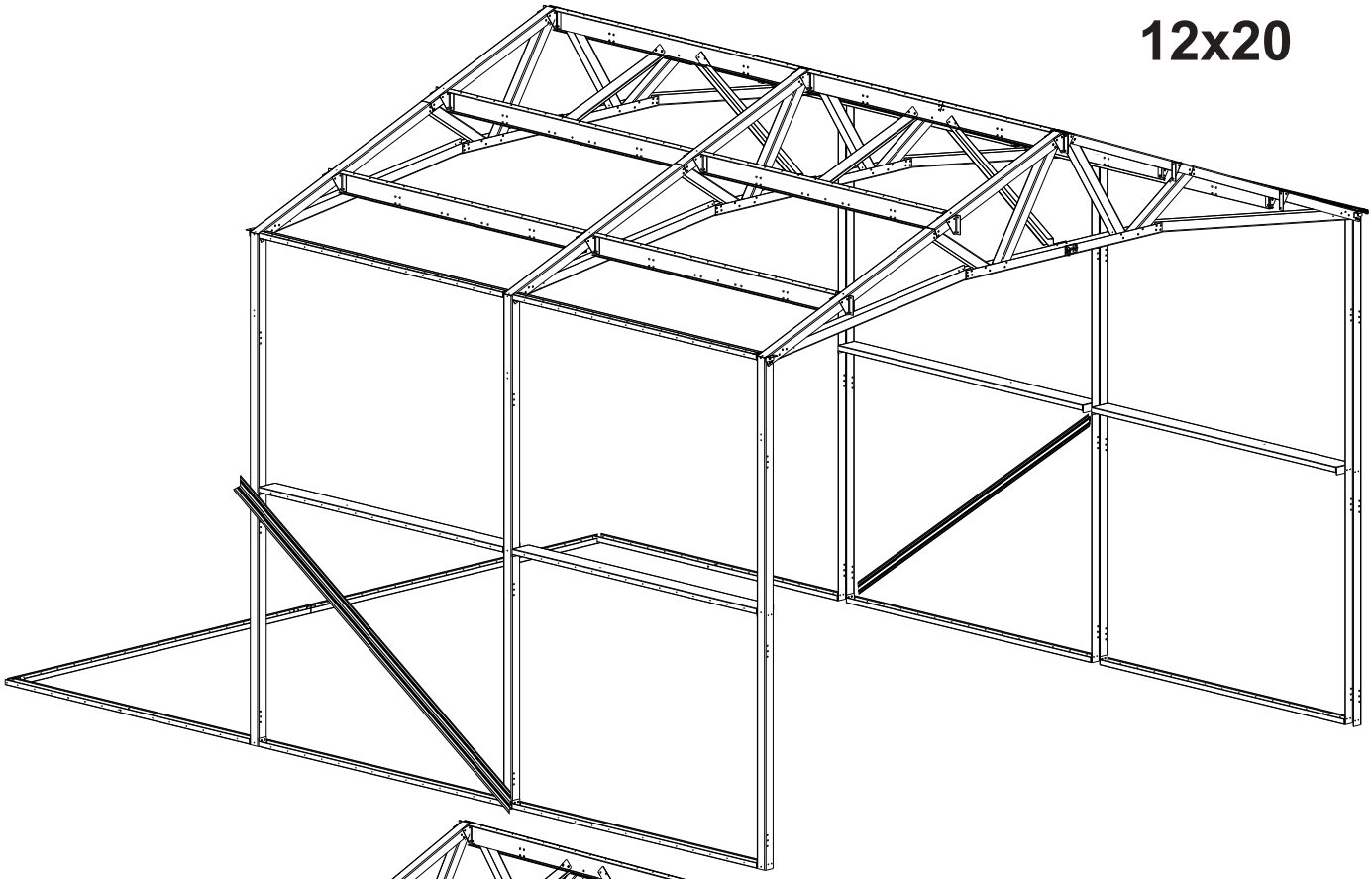

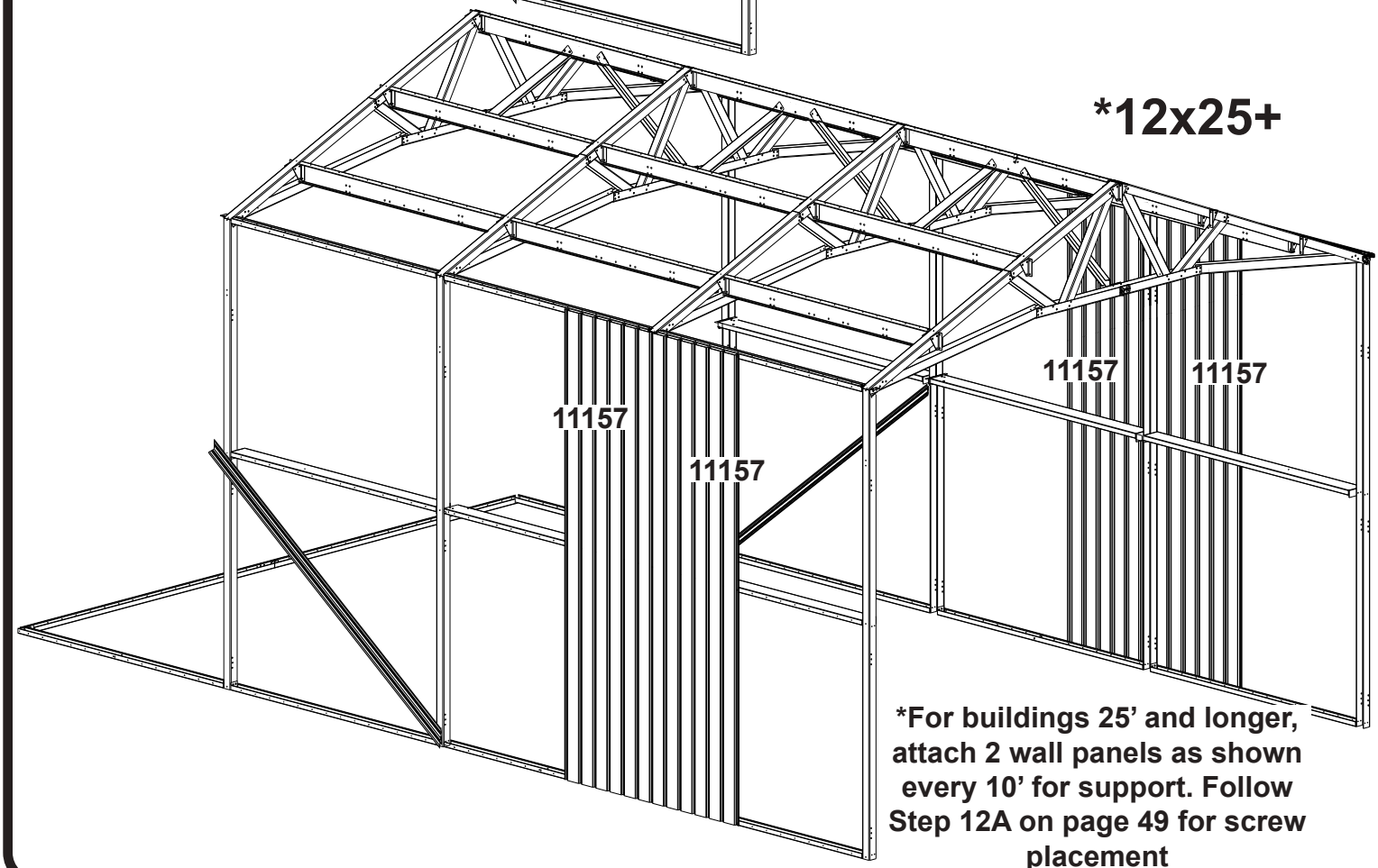

***For buildings 25' and longer, attach 2 wall panels as shown every 10' for support. Follow Step 12A on page 49 for screw placement**

Step 6A

12x10+ Continued

Continue supporting truss for 12x10 until frame is complete

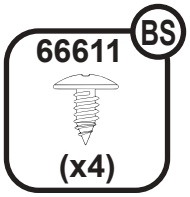

***Lubricate screws to aid assembly**

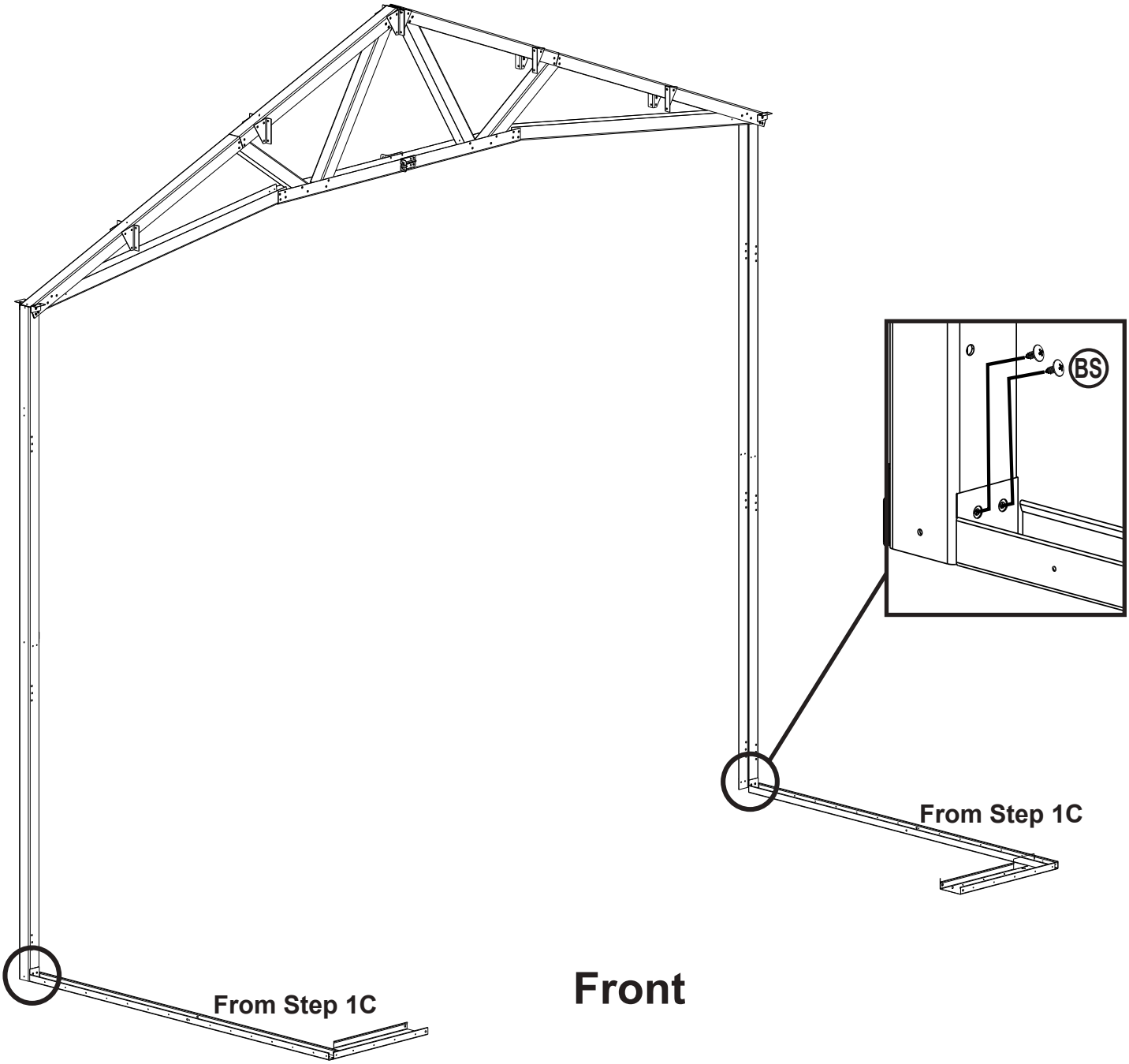

Step 6B

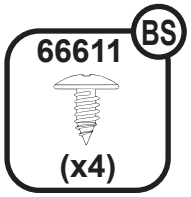

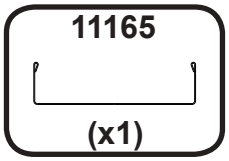

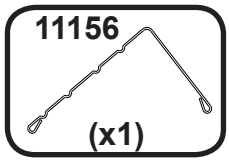

***Lubricate screws to aid assembly**

***Holes on Outside**

11165

BS

11156

BS

11165

11156

Front

Step 6C

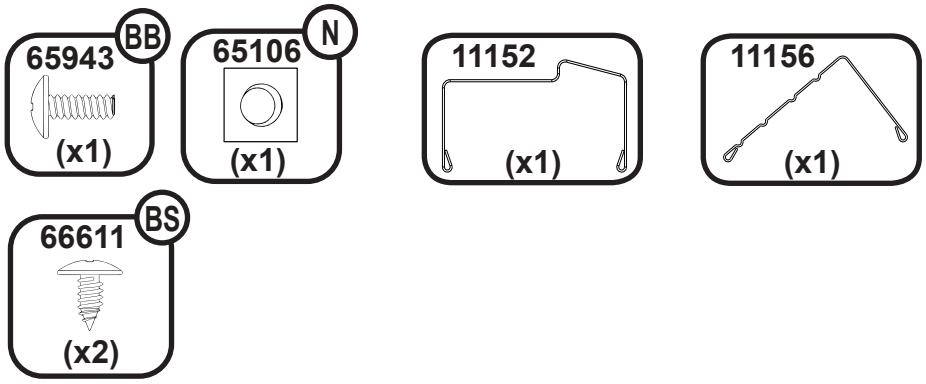
65943
BB
(x1)
65106
N
(x1)
11152
(x1)
11156
(x1)
66611
BS
(x2)

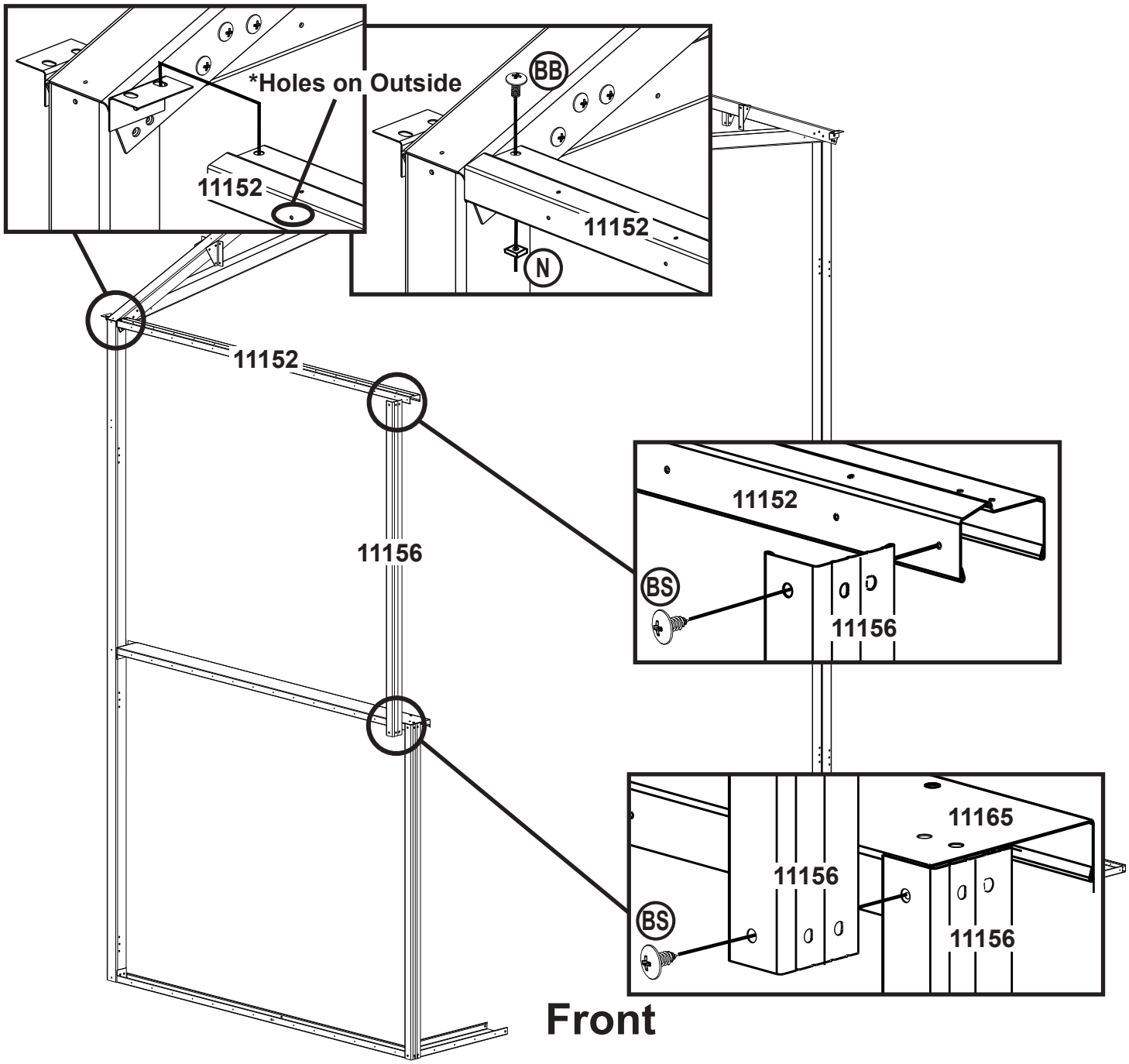
*Holes on Outside
11152
BB
11152
N
11152
11156
11152
BS
11156
11165
11156
BS
11156
Front

Step 6D

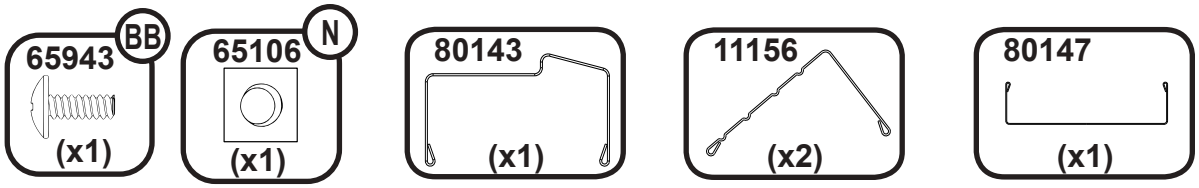

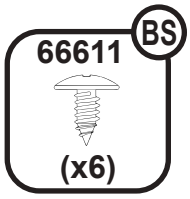

Repeat Steps 6B and 6C for the other side with holes facing outside

For Door Option B, follow Step 9 on page 39 in place of this step

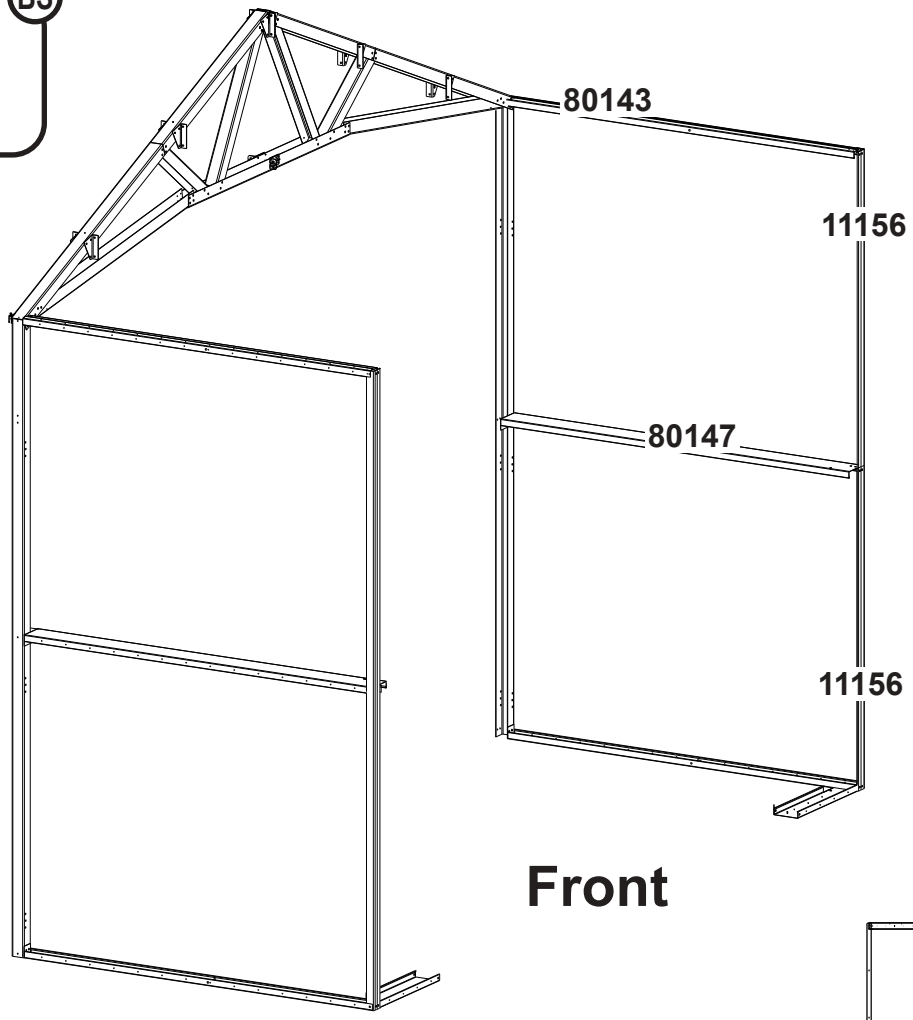

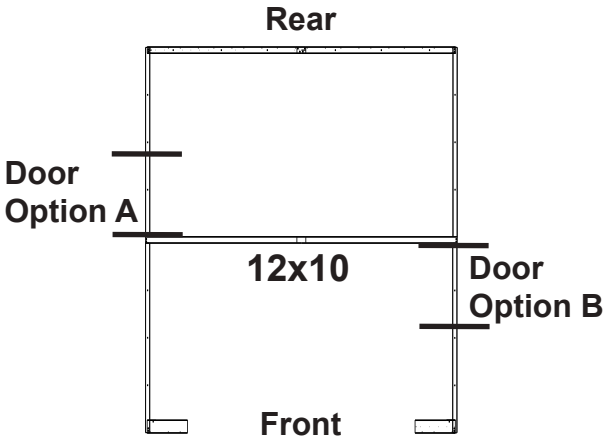

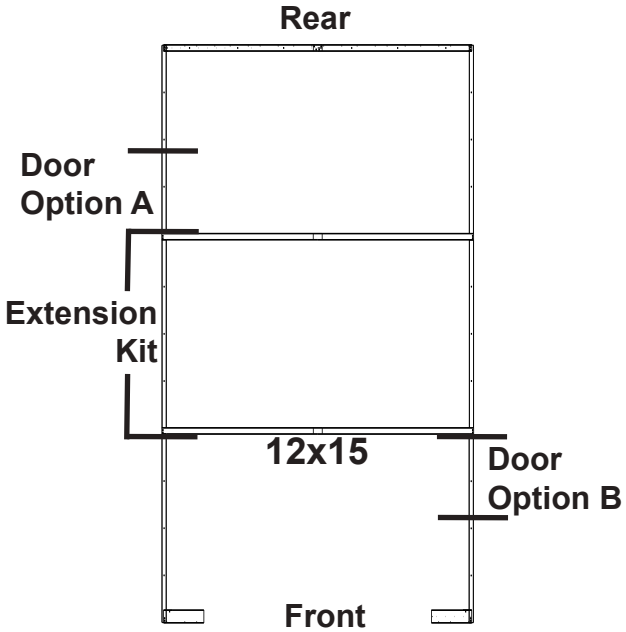

Step 6E

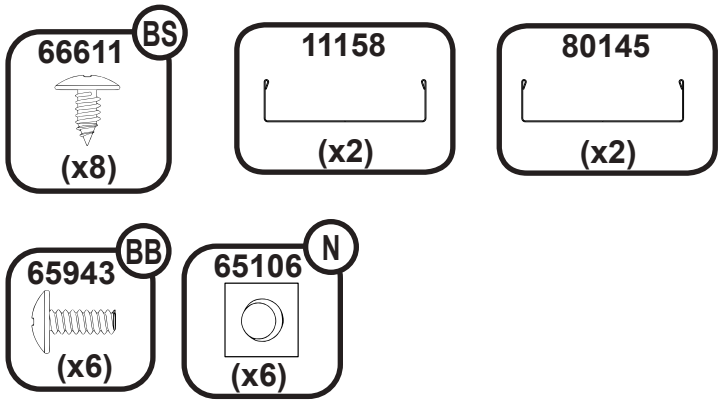
66611
BS
(x8)
11158
(x2)
80145
(x2)
65943
BB
(x6)
65106
N
(x6)

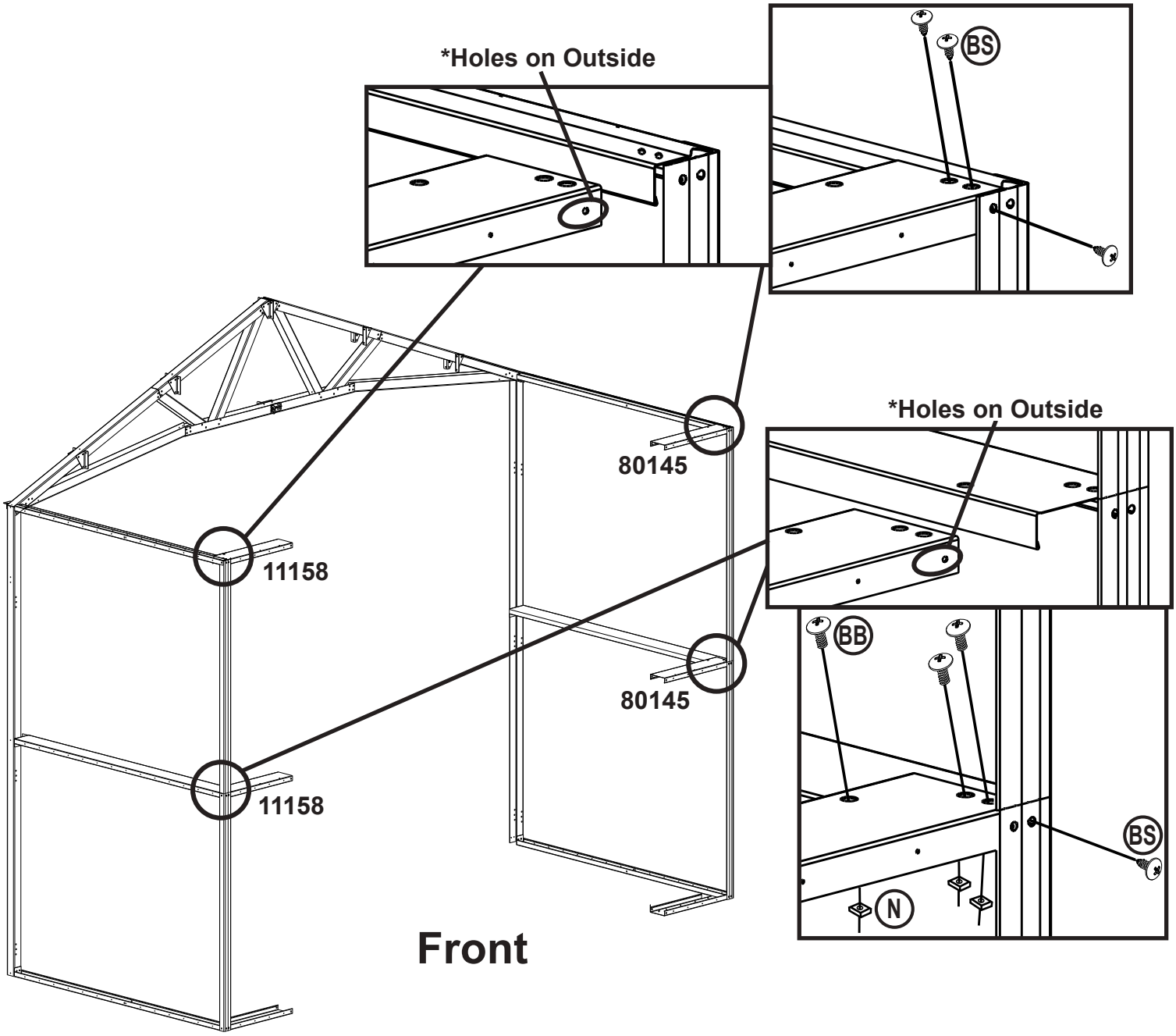
*Holes on Outside
BS
*Holes on Outside
80145
11158
80145
11158
BB
BS
N
Front

Step 7A

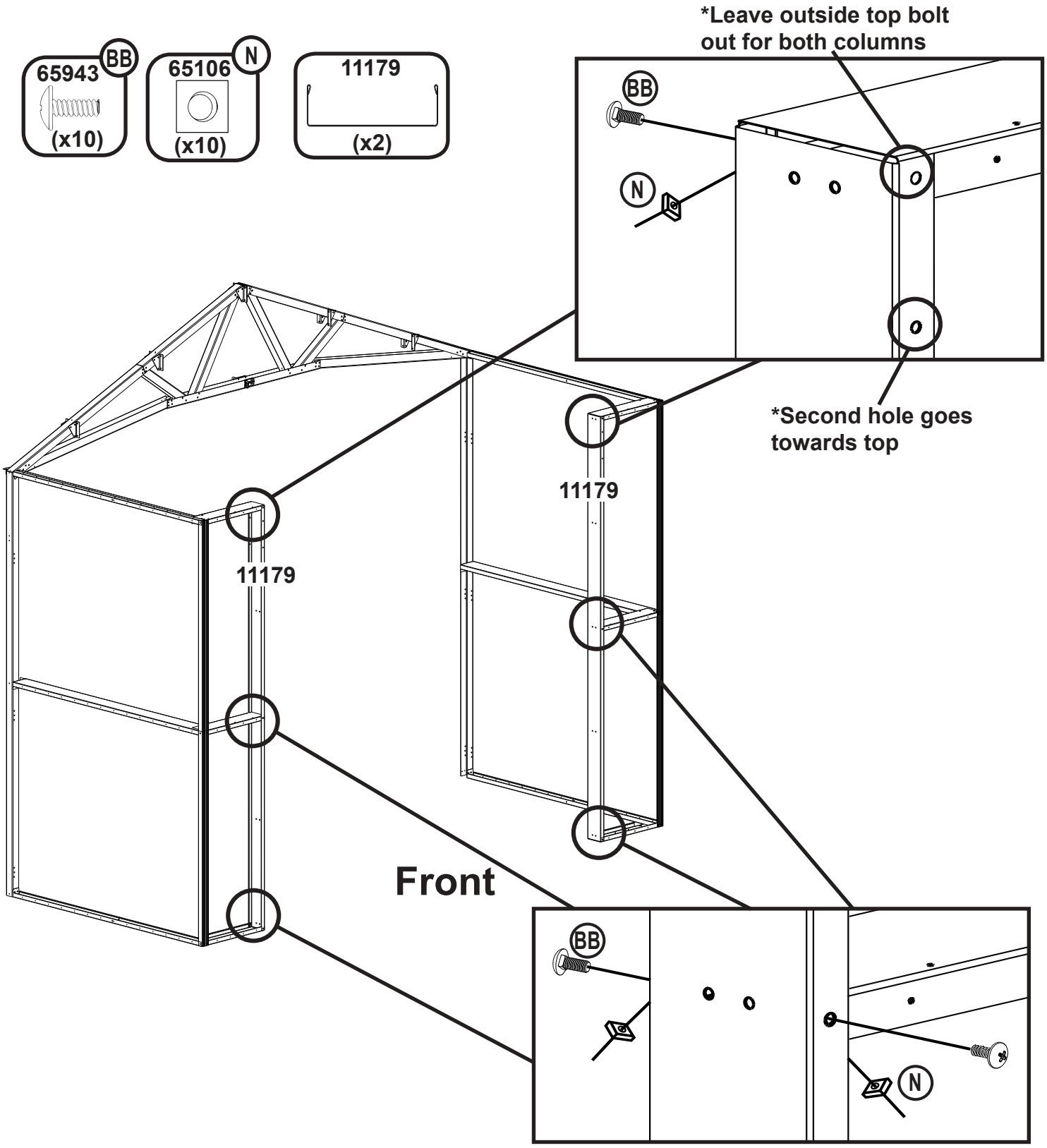
65943
BB
(x10)
65106
N
(x10)
11179
(x2)
*Leave outside top bolt out for both columns
BB
N
*Second hole goes towards top
11179
11179
Front
BB
N

Step 7B

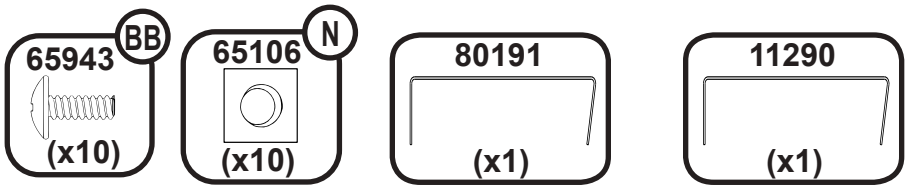
65943
BB
(x10)
65106
N
(x10)
80191
(x1)
11290
(x1)

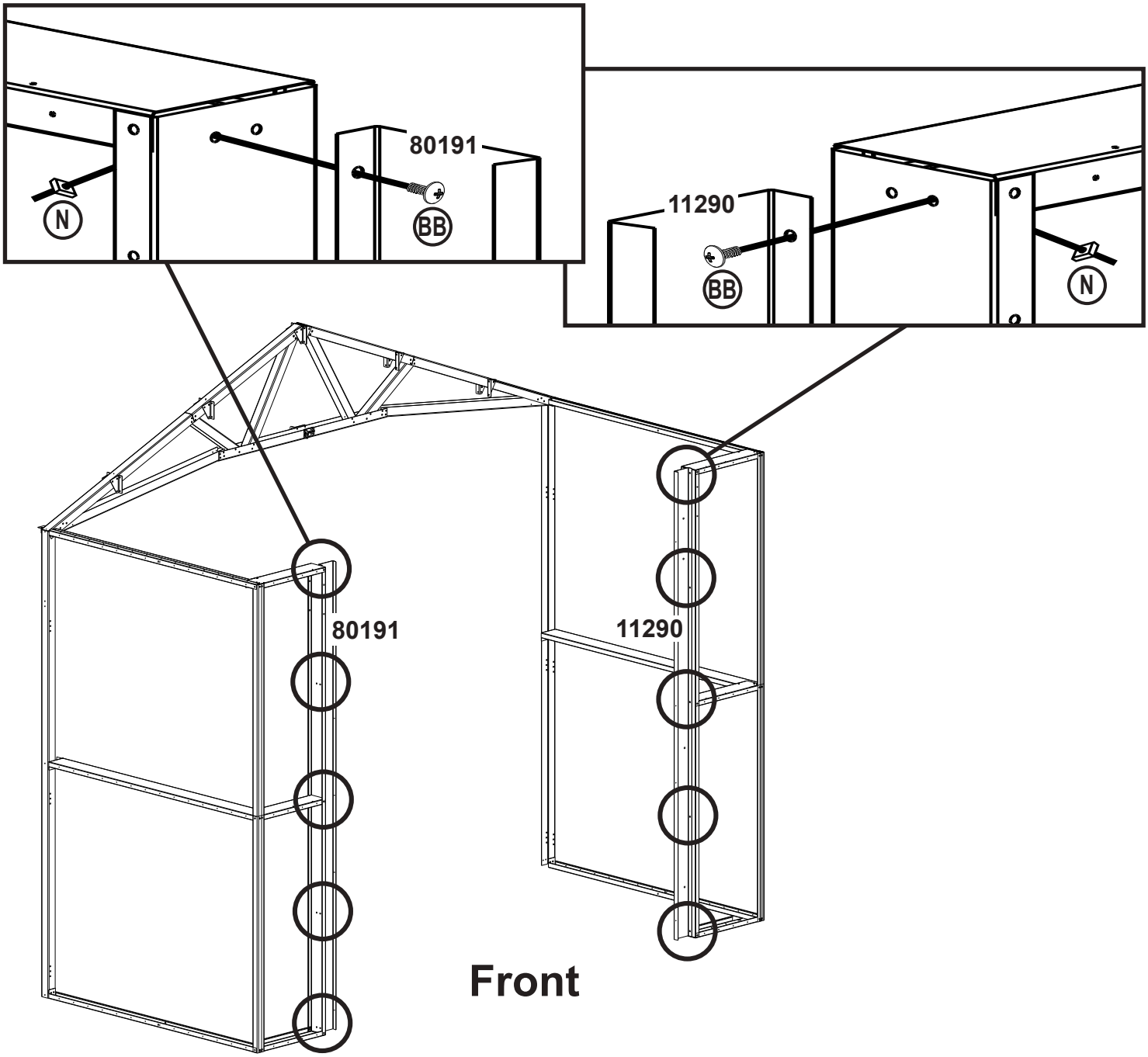
80191
N
BB
11290
BB
N
80191
11290
Front

Step 7C

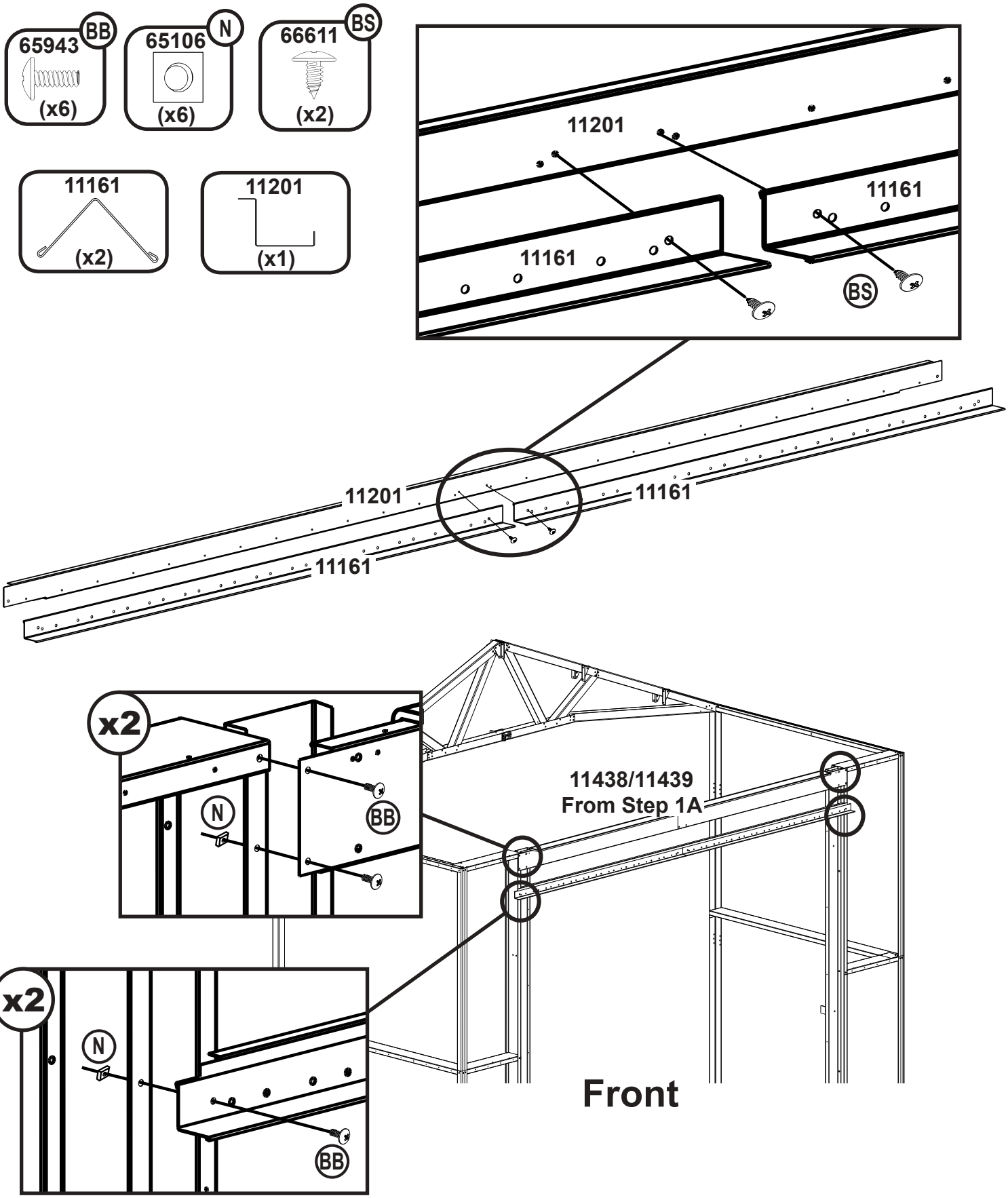
65943
BB
(x6)
65106
N
(x6)
66611
BS
(x2)
11161
(x2)
11201
(x1)
11201
11161
11161
BS
11201
11161
11161
x2
N
BB
11438/11439
From Step 1A
x2
N
BB
Front

Step 8A

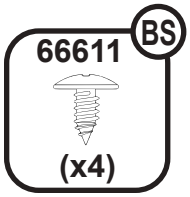

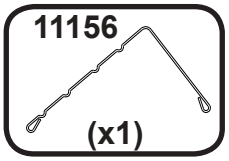

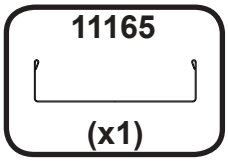

***Lubricate screws to aid assembly**

***Holes on Outside**

11165

BS

11156

BS

11165

11156

Rear

Step 8B

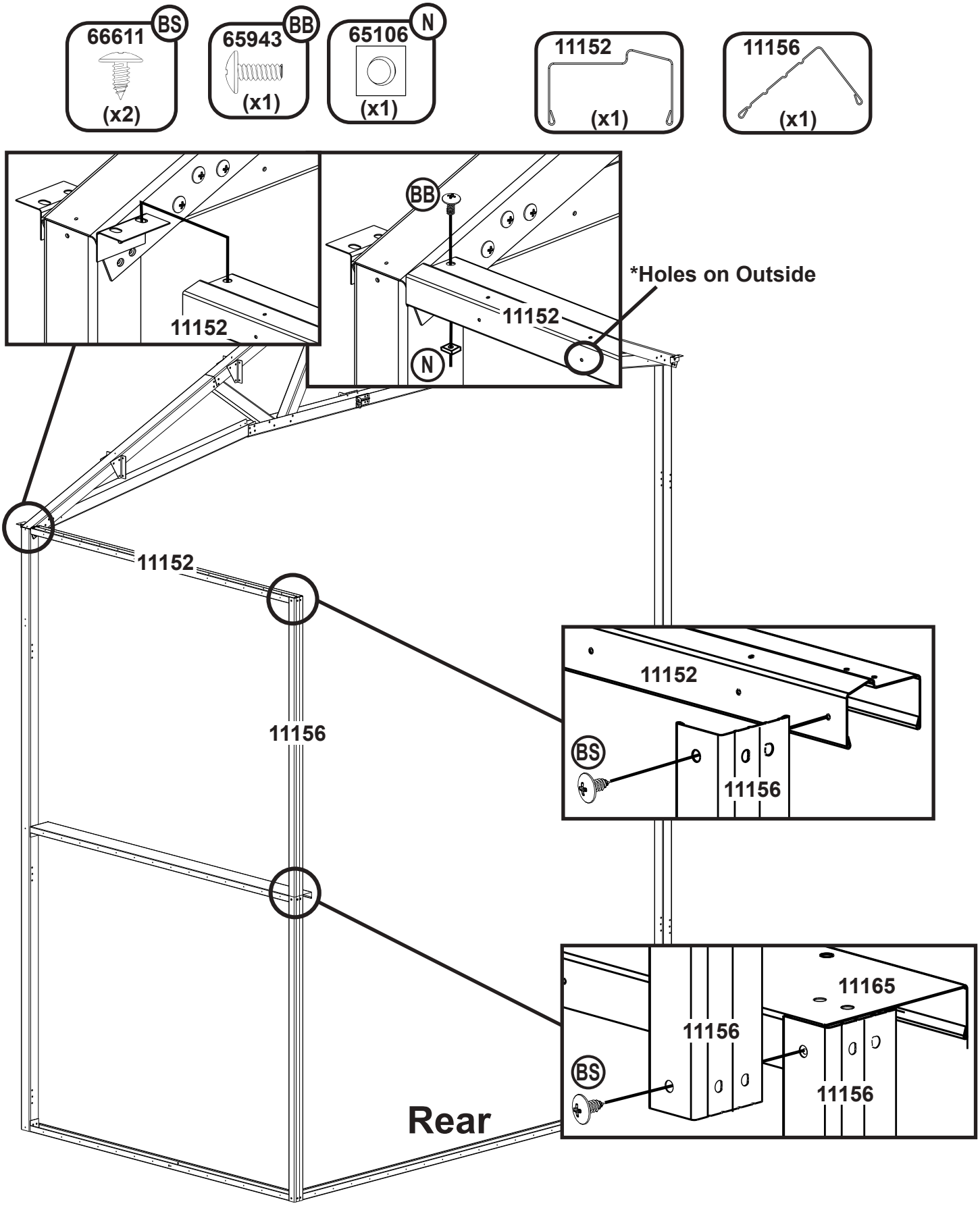
66611
BS
(x2)
65943
BB
(x1)
65106
N
(x1)
11152
(x1)
11156
(x1)
11152
BB
*Holes on Outside
11152
N
11152
11152
11156
BS
11156
11165
11156
BS
11156
Rear

Step 9

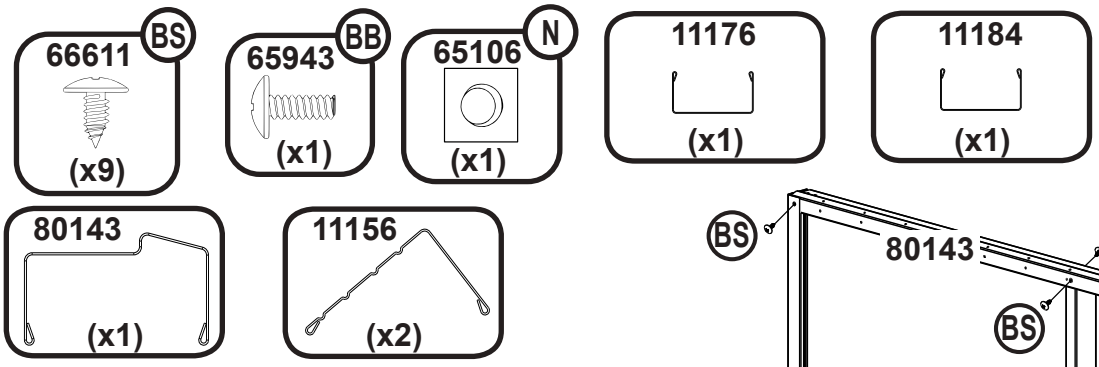

For Door Option B, follow Step 6D on page 32 in place of this step

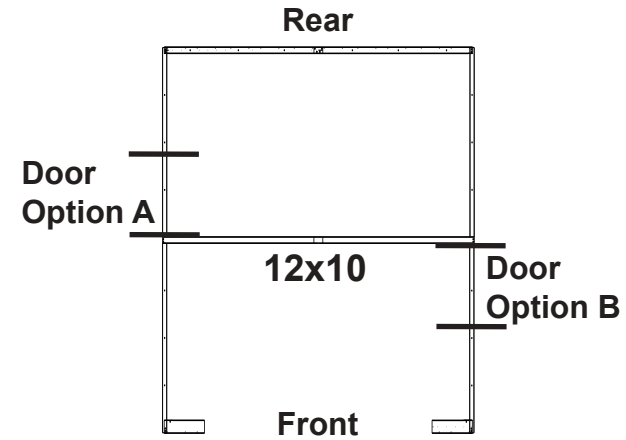

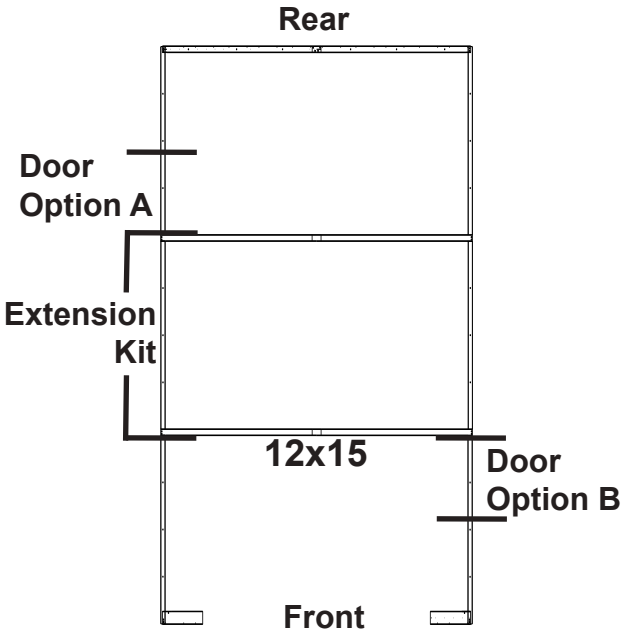

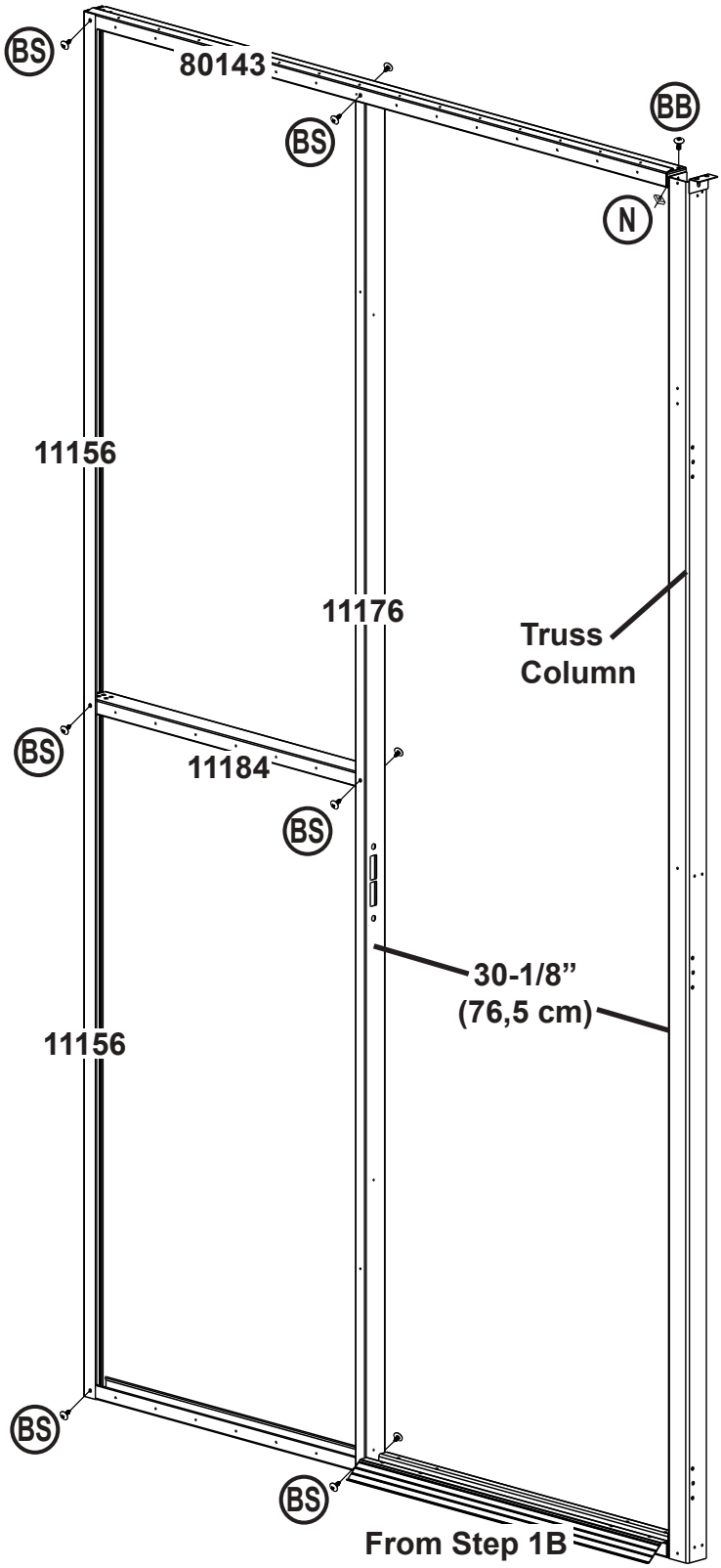

Step 10A

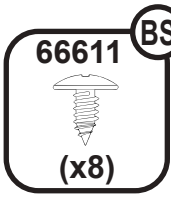

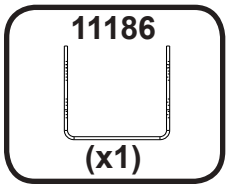

*Lubricate screws to aid assembly

Step 10B

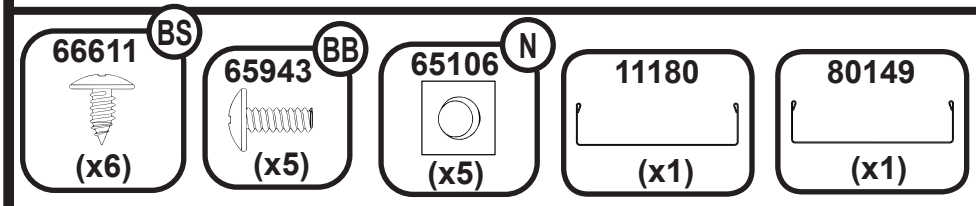

*Lubricate screws to aid assembly

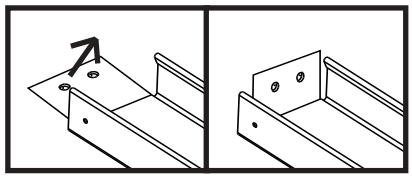

*Bend tabs up for 80149 and 11180

BB
BS
N
BB
BS
N
80149
11180
BS
Rear

Step 11A

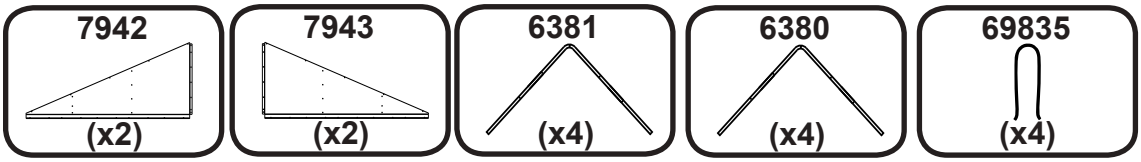

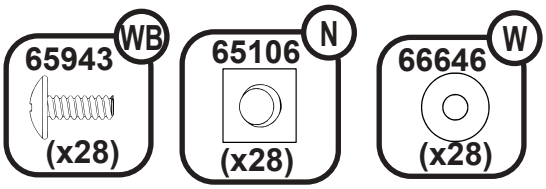

*Bolts to match wall panel color

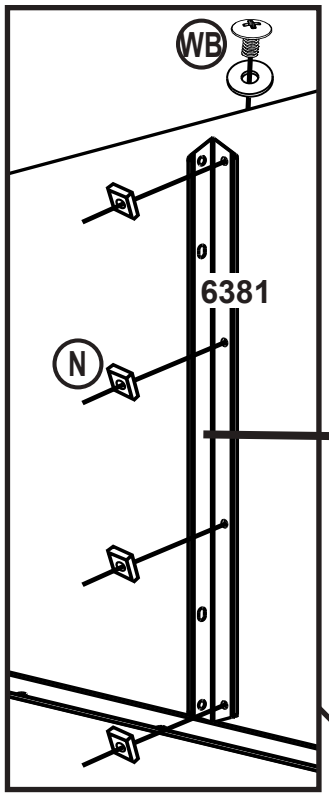

Mounting leg faces inwards

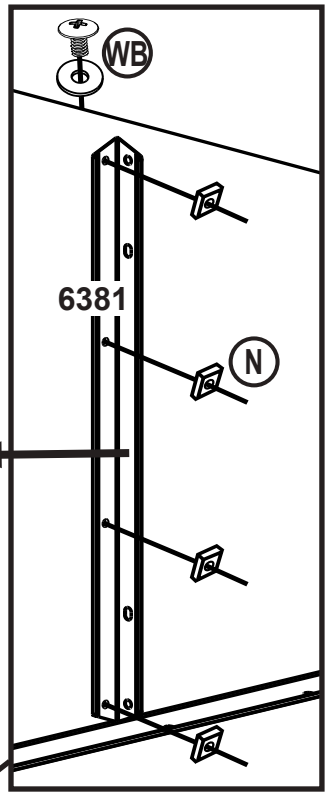

Mounting leg faces inwards

x2

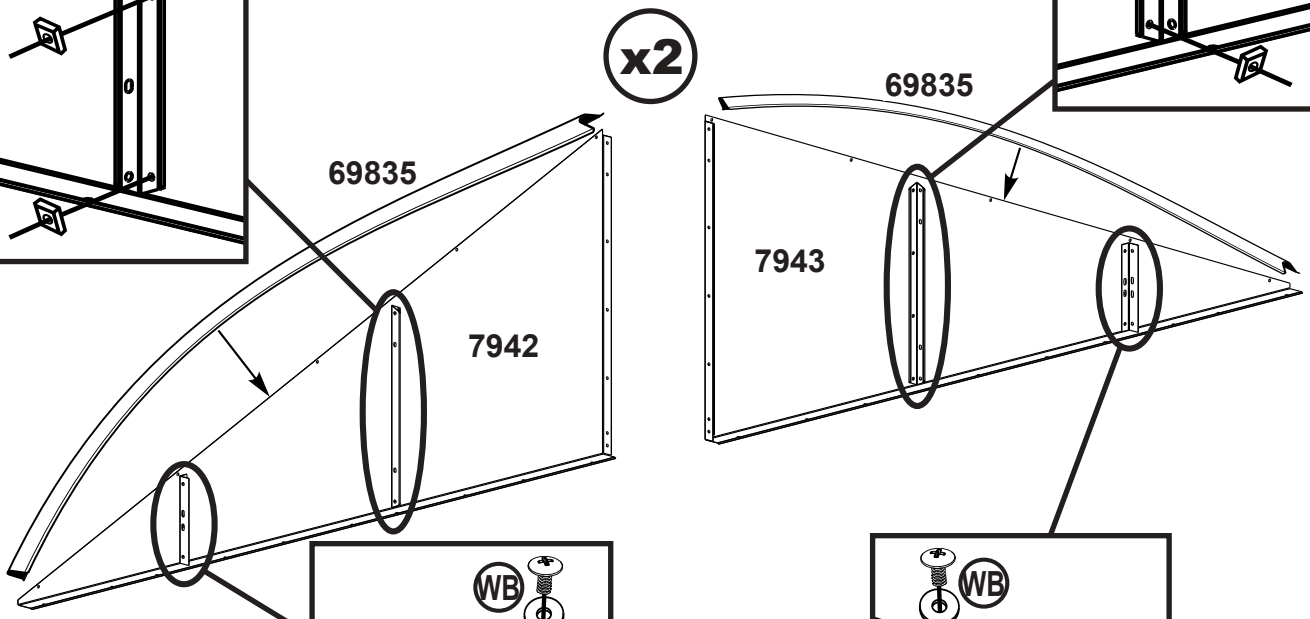

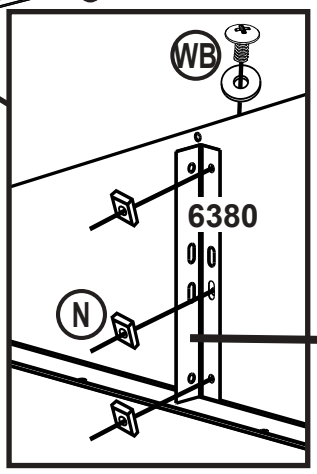

Mounting leg faces inwards

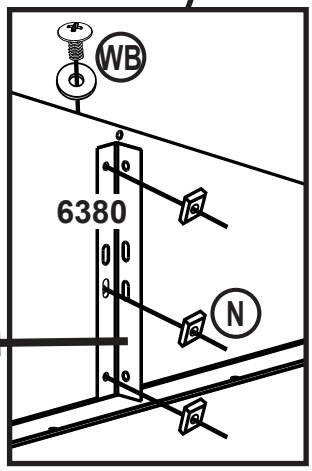

Step 11B

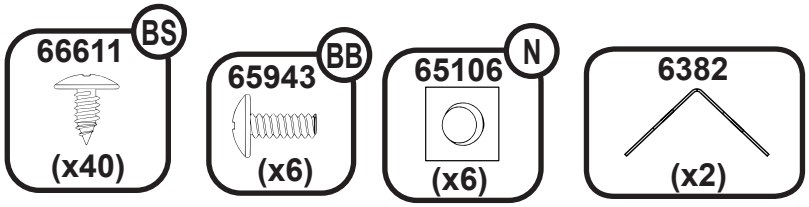
66611
BS
(x40)
65943
BB
(x6)
65106
N
(x6)
6382
(x2)

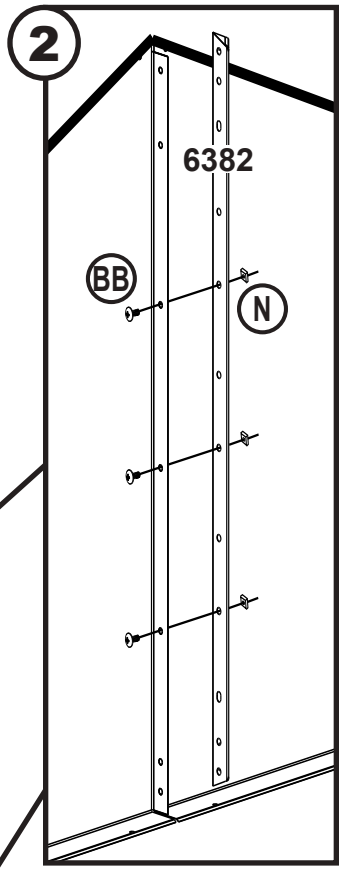
2
6382
BB
N

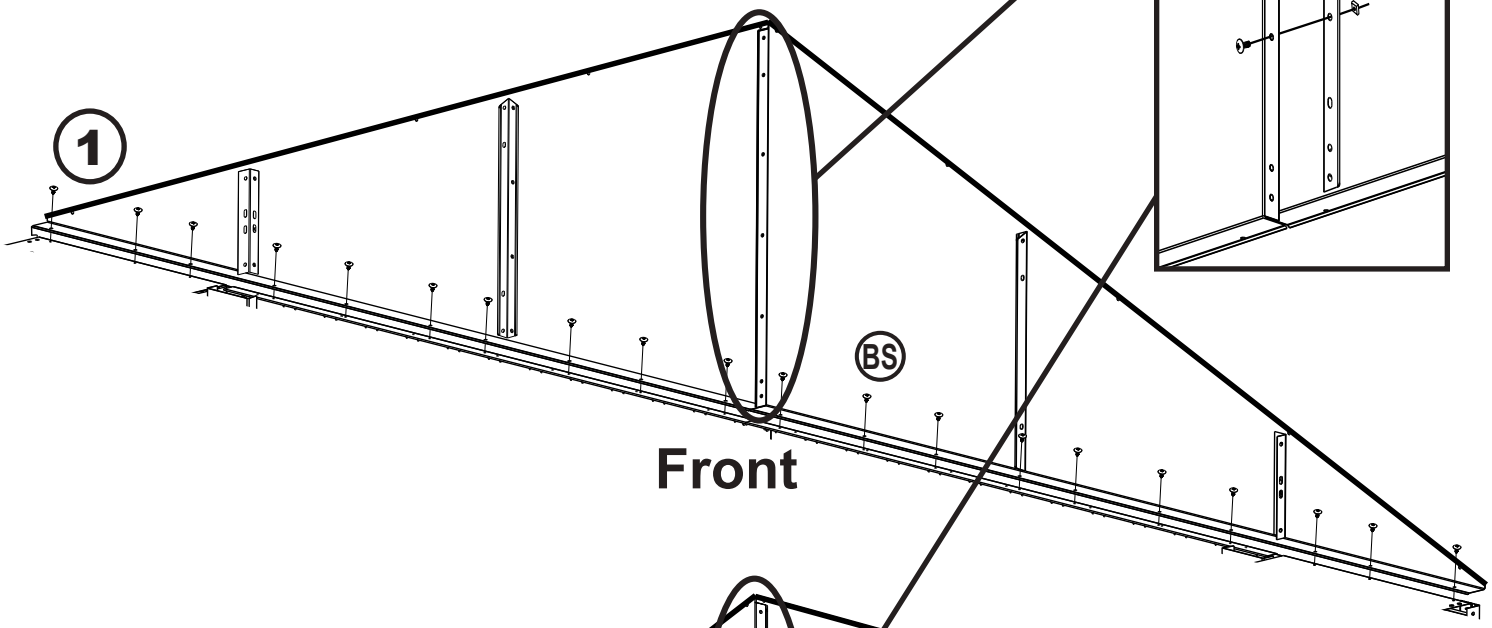
1
BS
Front

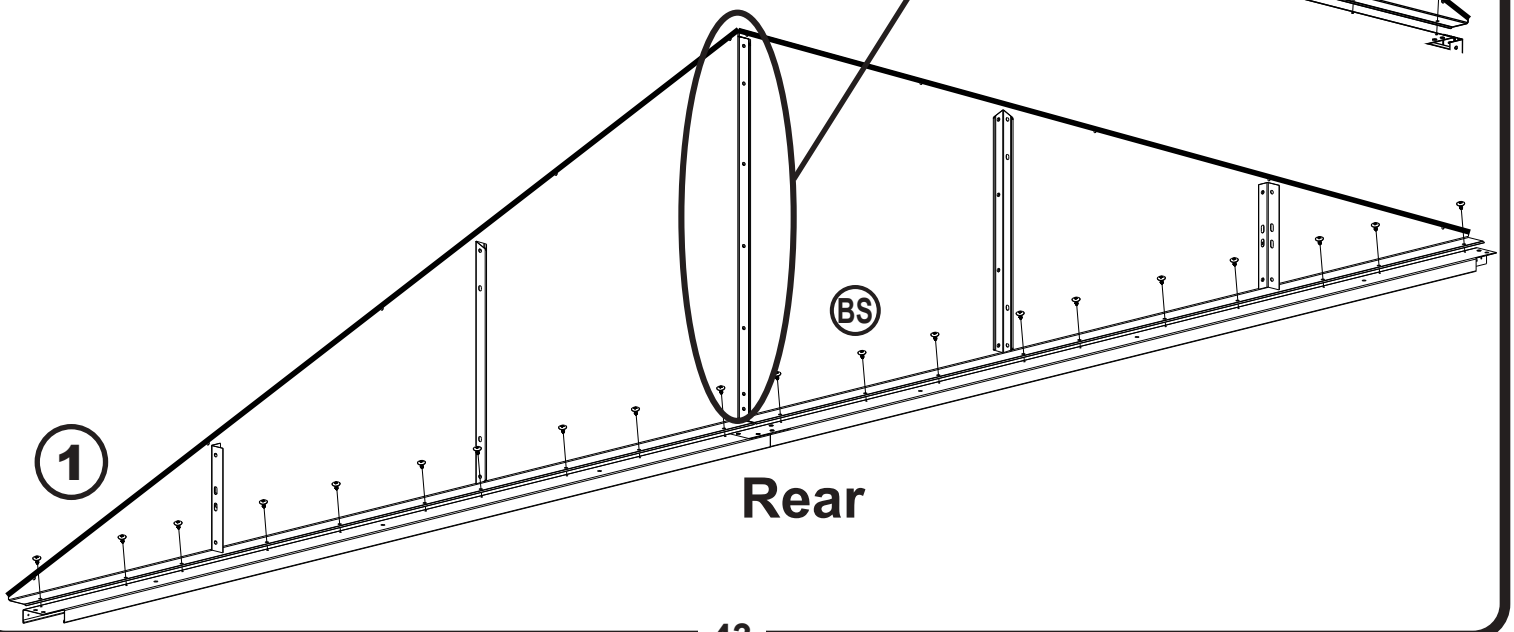
1
BS
Rear

Step 11C

*Repeat this page for the Rear of the shed

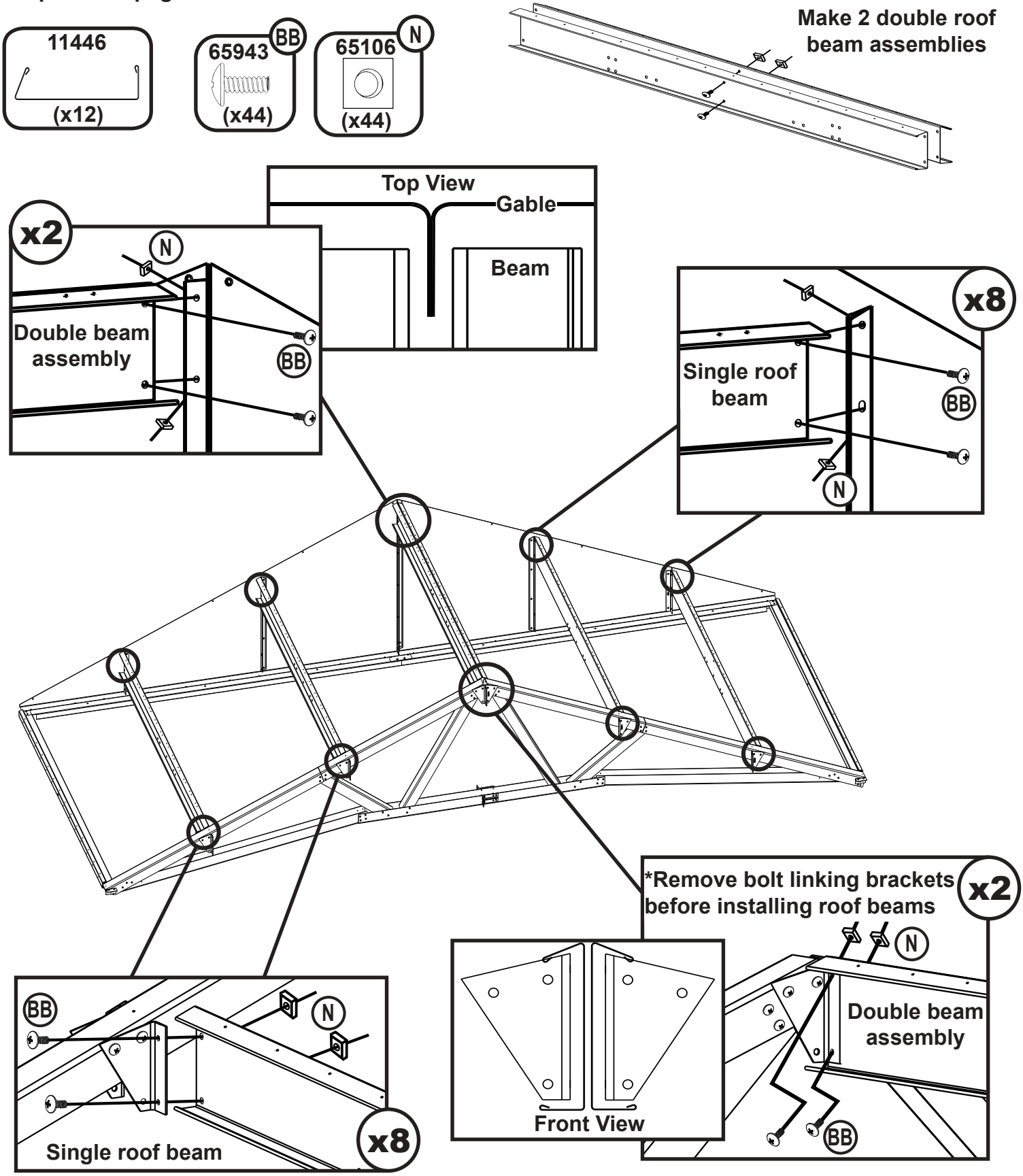

Step 11D

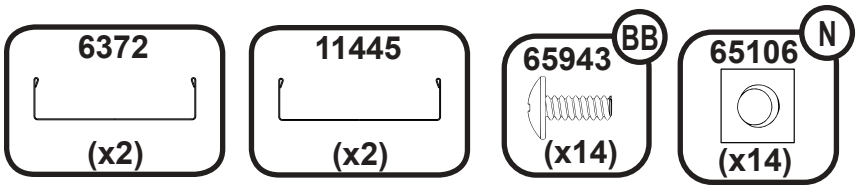
6372
(x2)
11445
(x2)
65943
BB
(x14)
65106
N
(x14)

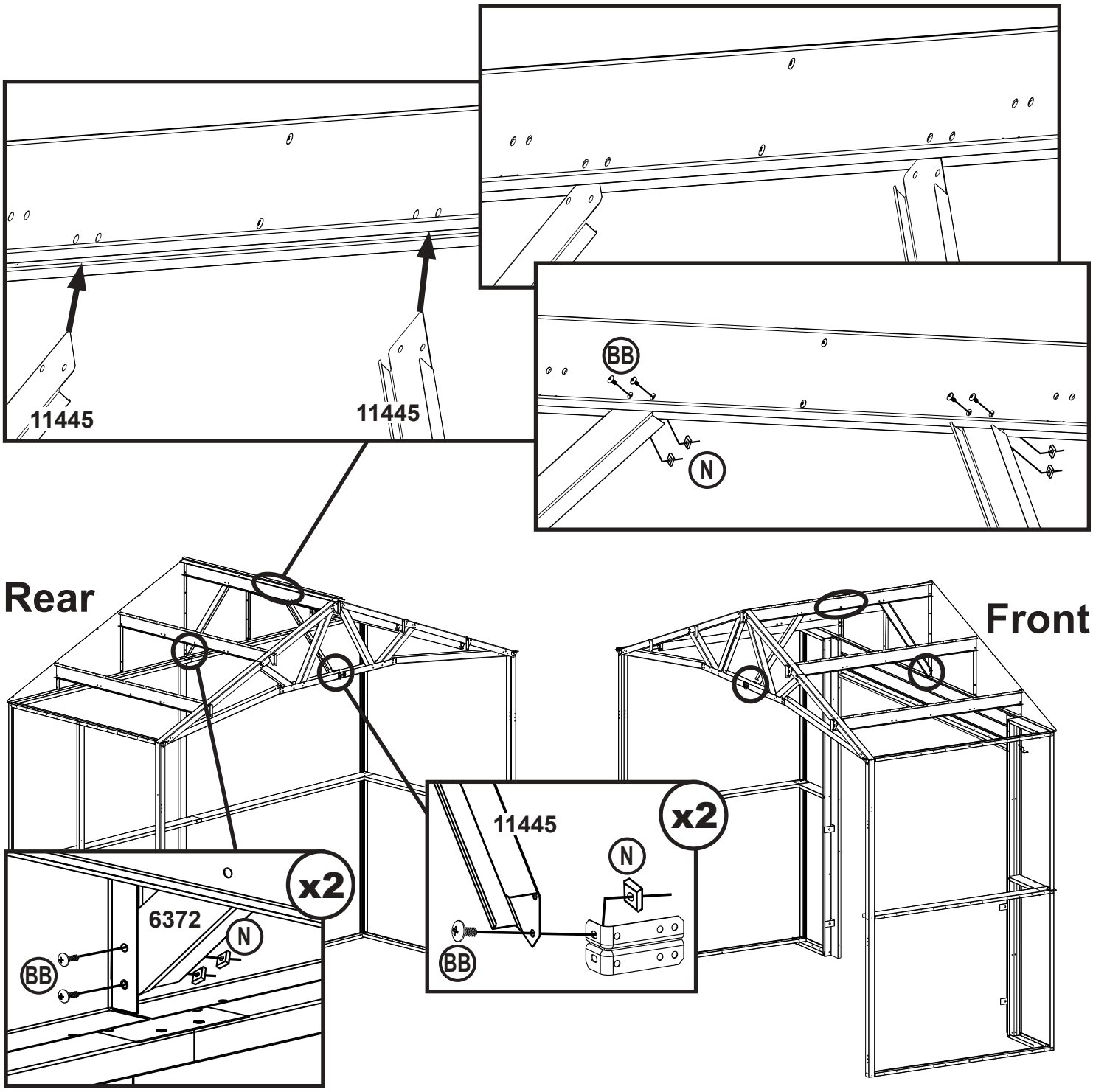
11445
11445
BB
N
Rear
Front
x2
6372
N
BB
11445
x2
N
BB

Squaring and Anchoring

Measure the diagonals to make sure the building is square. Use this time to anchor the building down. See the anchoring guide on page 6.

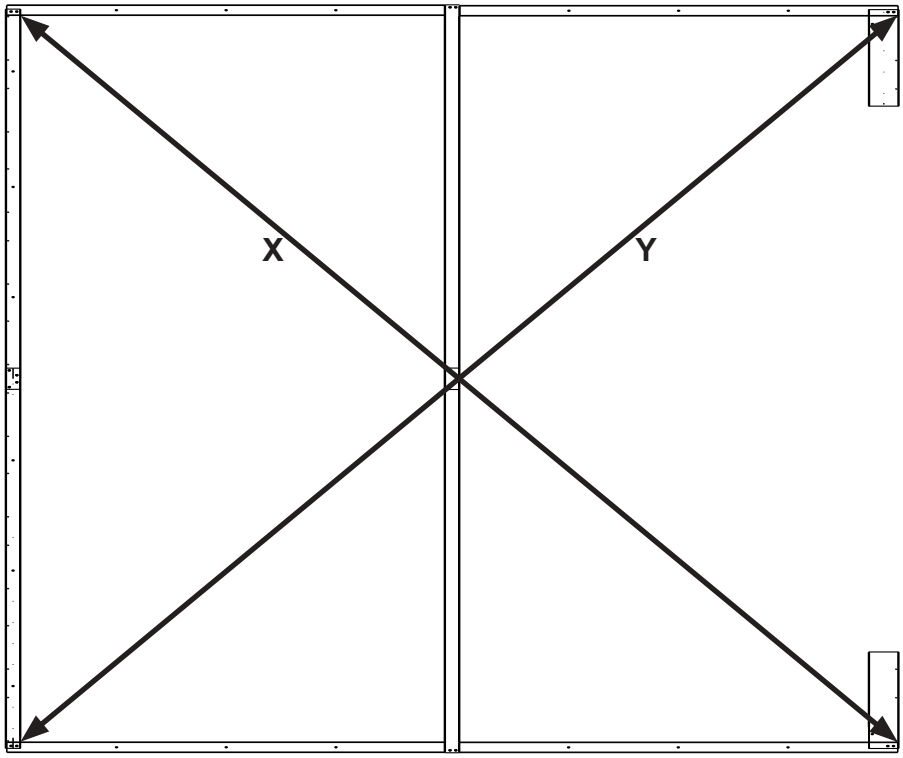

X=Y

12x10

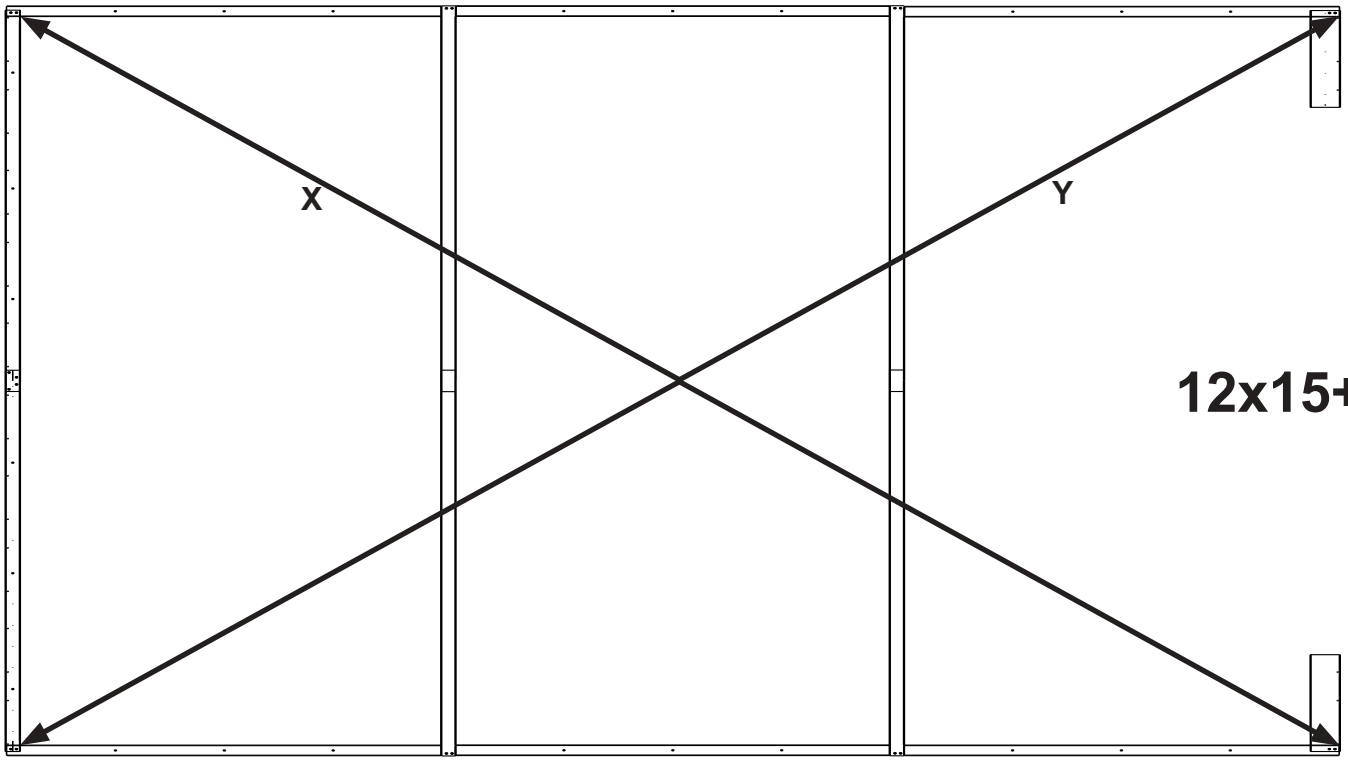

12x15+

OPTIONAL CAULK APPLICATION

To reduce water infiltration, apply caulk around the perimeter of the shed before installing panels.

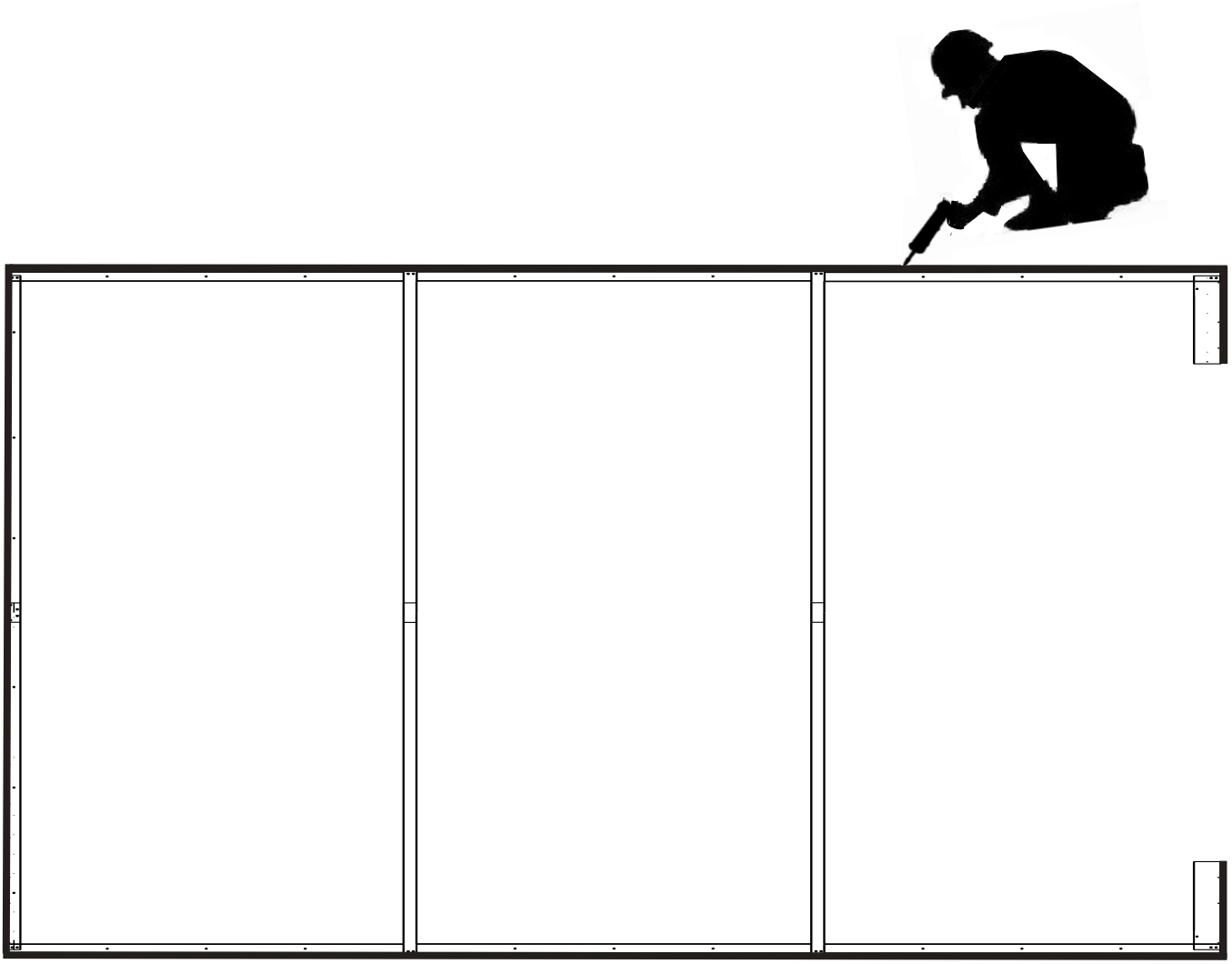

Side Panel Orientation

12x10

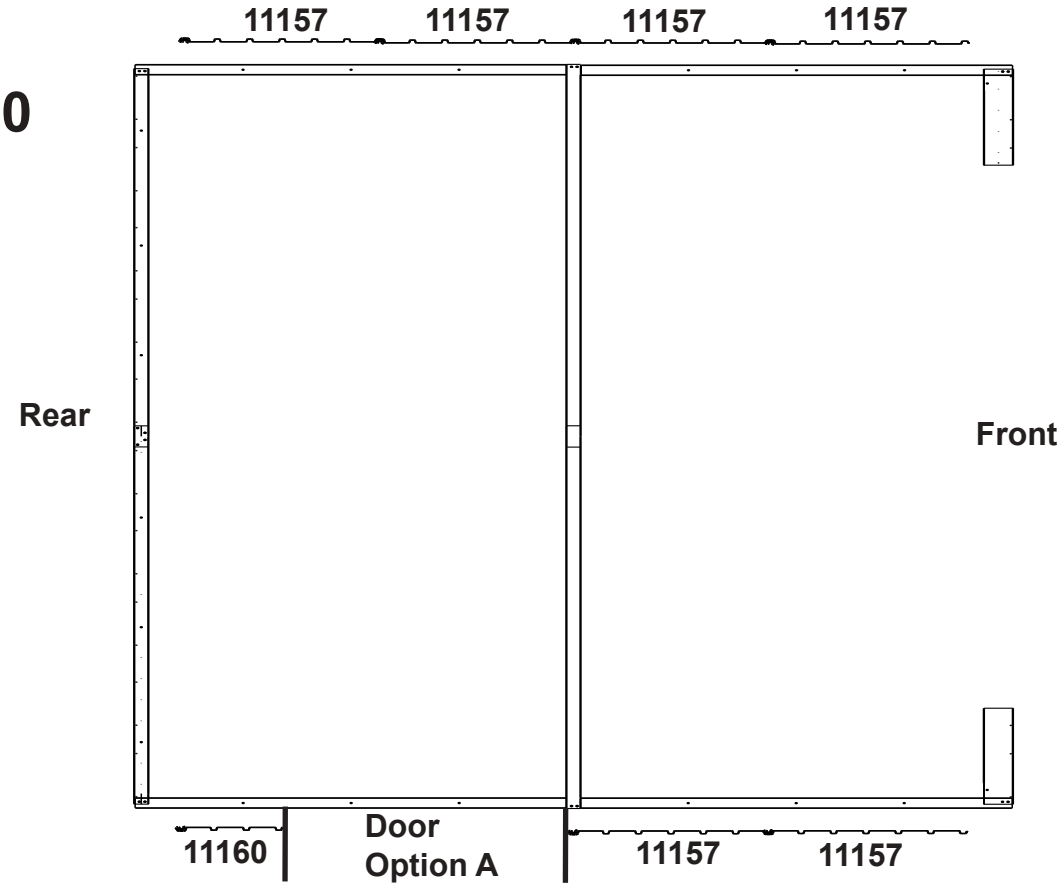

12x15

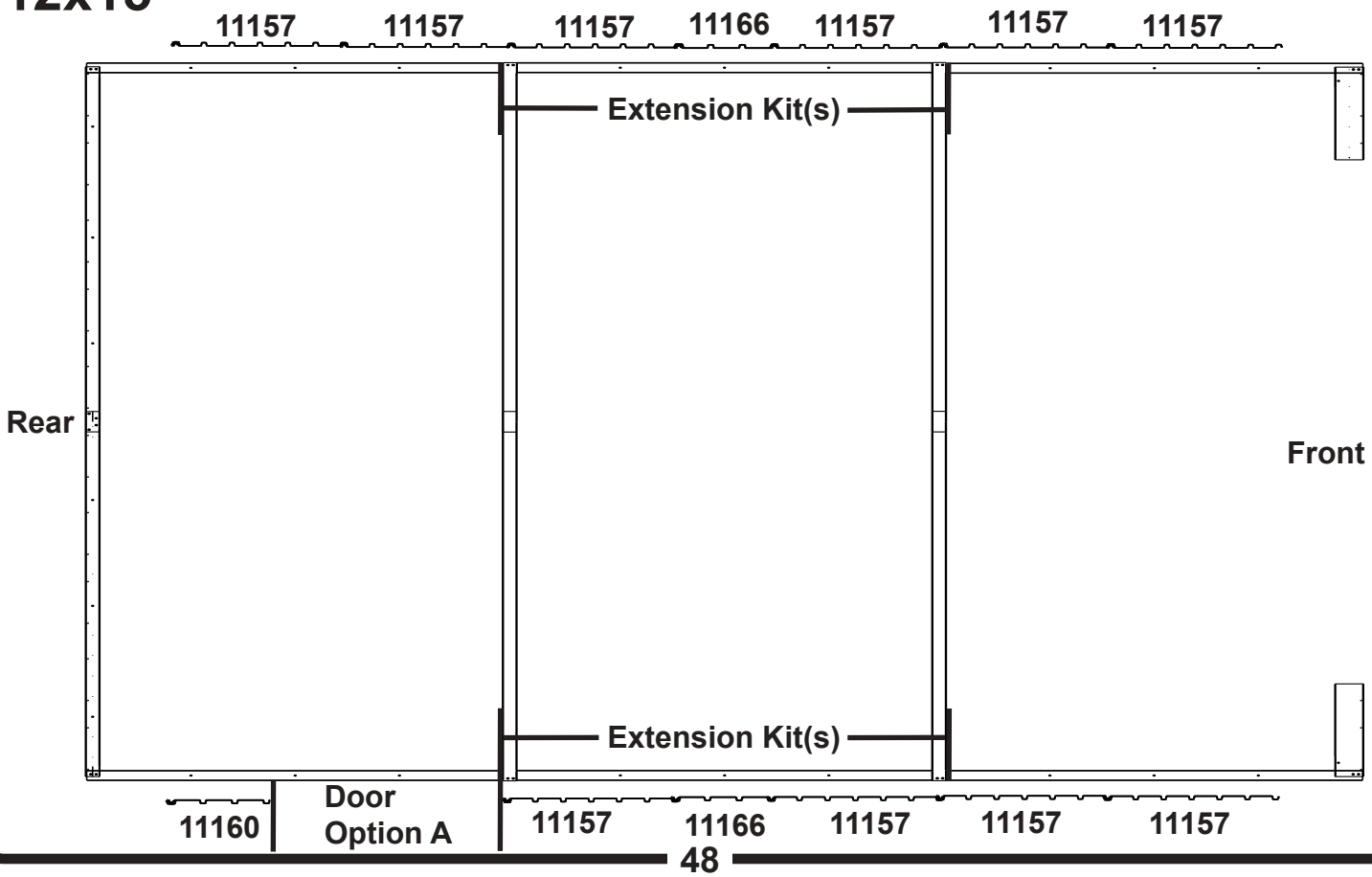

Step 12A

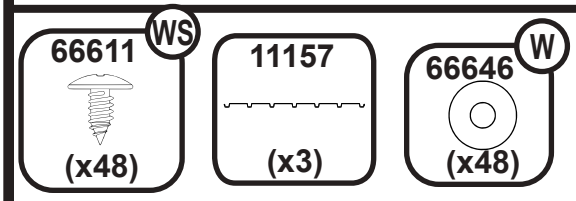

*Lubricate screws to aid assembly

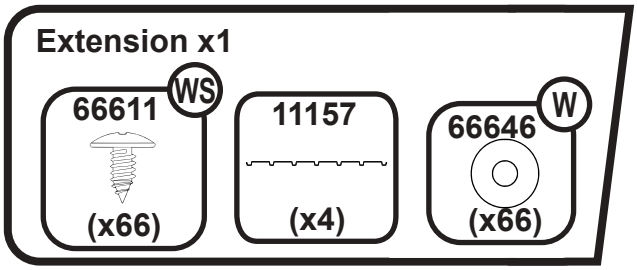

*For 12x15'+ sheds, remove the bracing from step 3C on page 25. Set that piece aside for later use.

NOTE Washers are to be used on painted parts only. Washers are not necessary on unpainted parts and there are not enough to use on every screw and bolt.

NOTE Painted screws are to be used on painted parts only. Make sure painted screws match wall color.

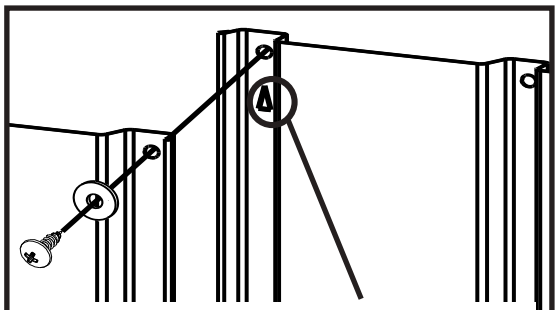

*When overlapping panels, make sure arrow is towards the top and covered up

Install 2 overlapping panels to each of the trusses. Leave gaps in between until all of the trusses are covered. Do this for each side of the shed.

Install one panel around the door opening.

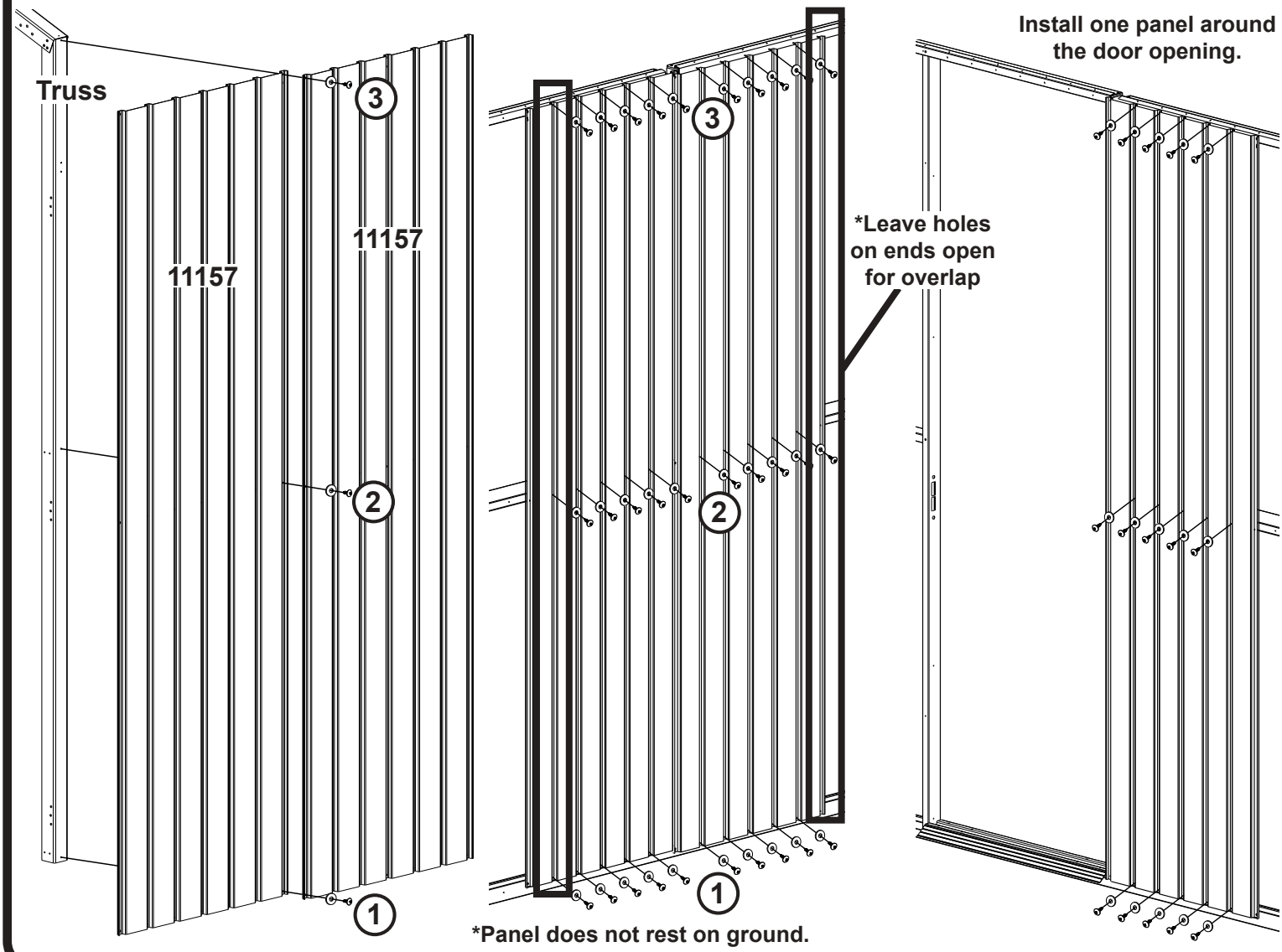

*Panel does not rest on ground.

Step 12B

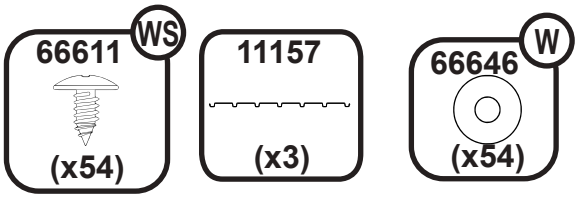

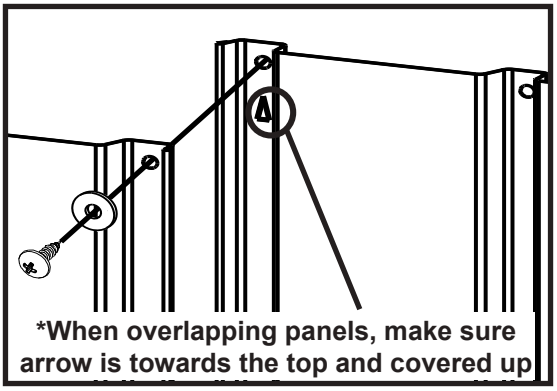

NOTE Painted screws are to be used on painted parts only. Make sure painted screws match wall color.

Continue installing panels up to each of the corners except by the door.

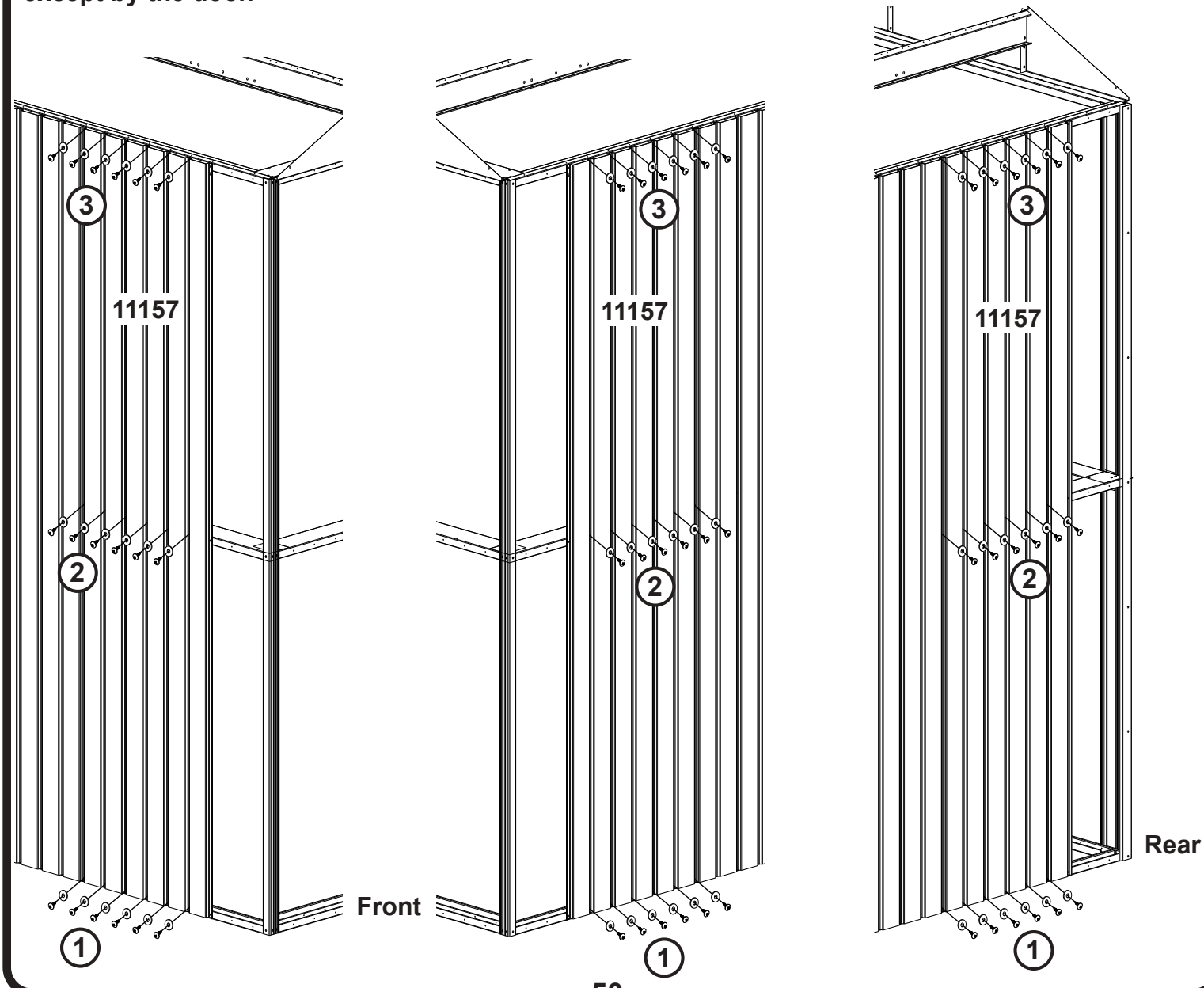

Step 12C

12x15+ Only

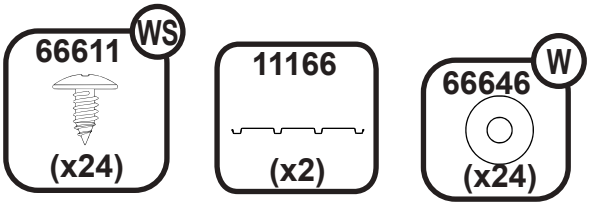

NOTE Painted screws are to be used on painted parts only. Make sure painted screws match wall color.

Install Panels to cover each of the gaps except around door

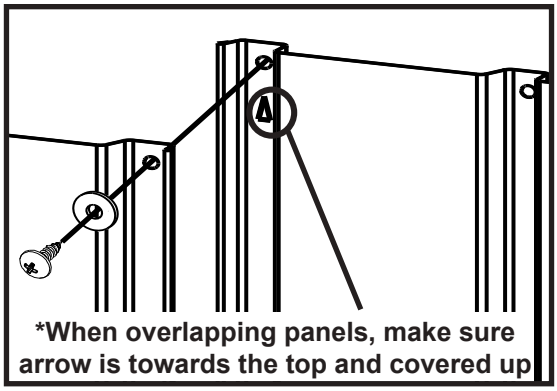

*When overlapping panels, make sure arrow is towards the top and covered up

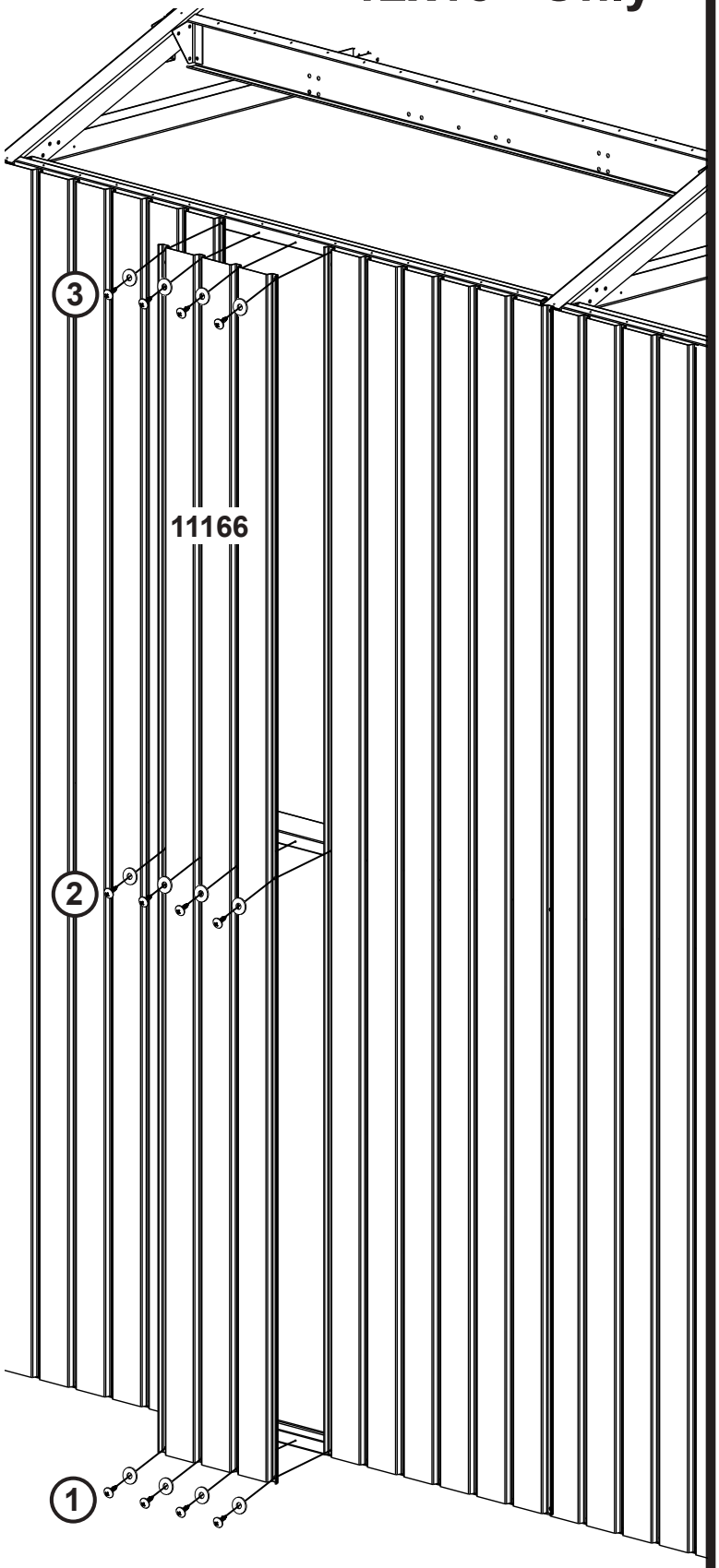

Step 13A

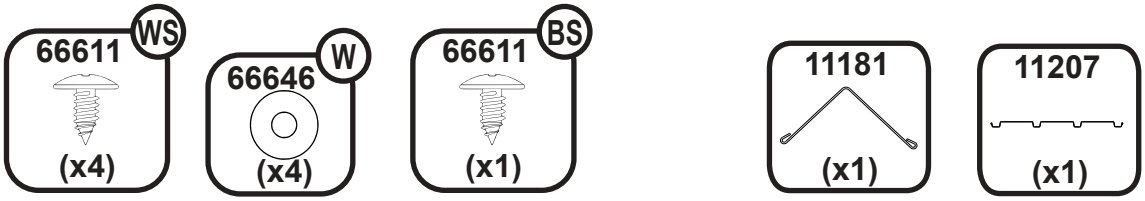

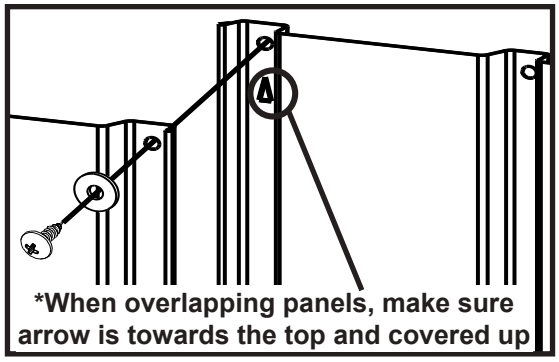

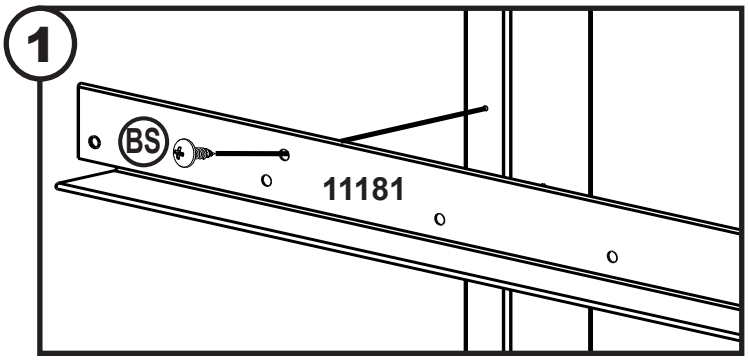

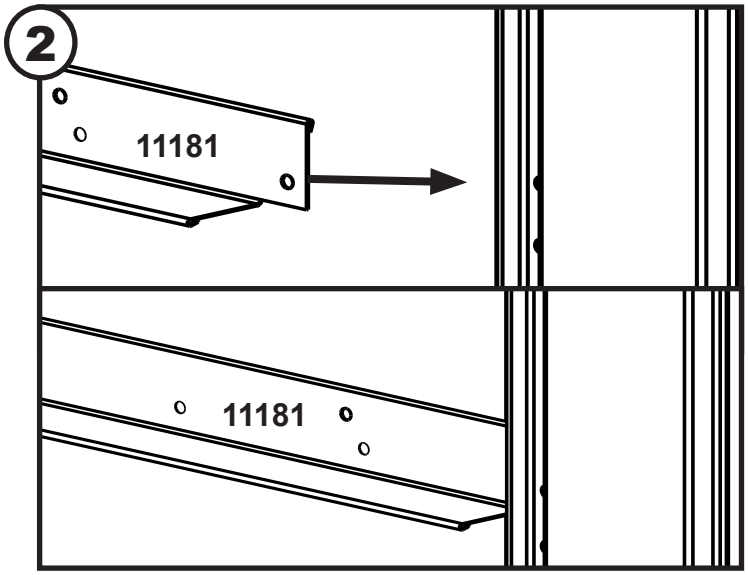

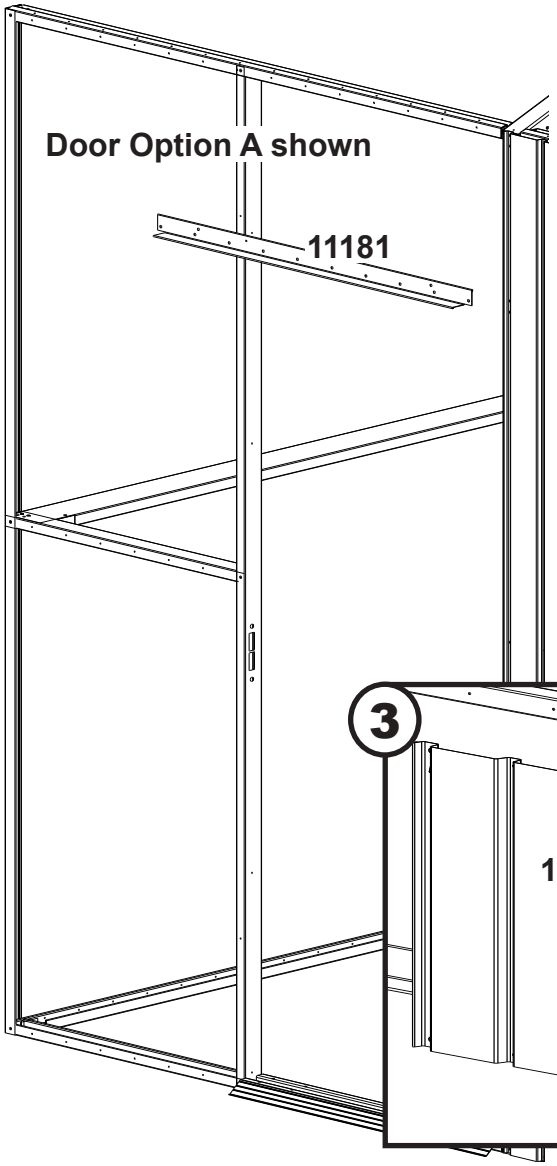

NOTE Painted screws are to be used on painted parts only. Make sure painted screws match wall color.

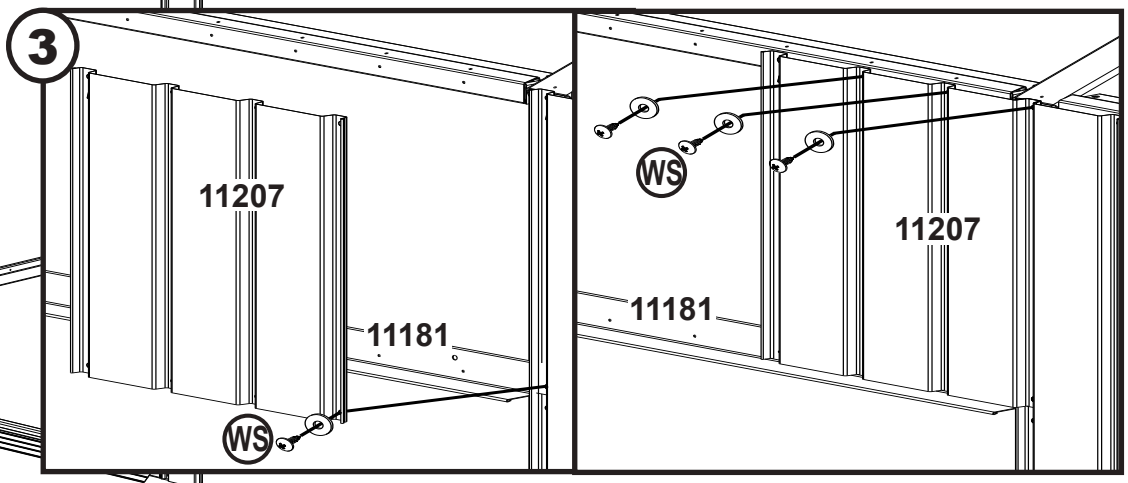

Step 13B

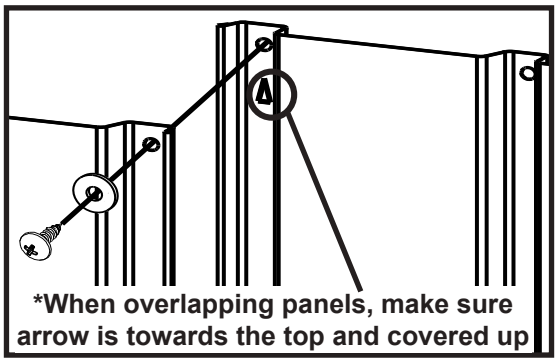

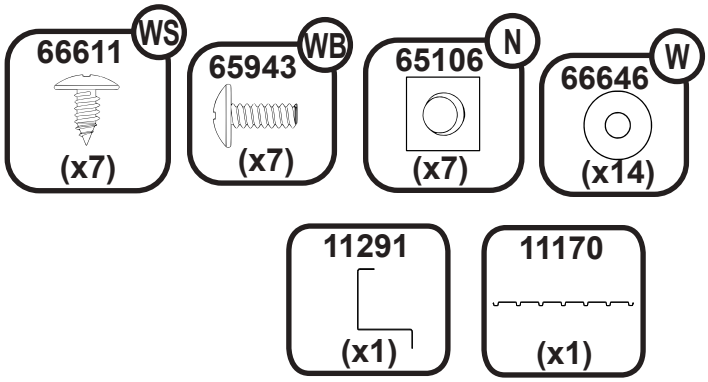

NOTE Painted fasteners are to be used on painted parts only. Make sure painted fasteners match wall color.

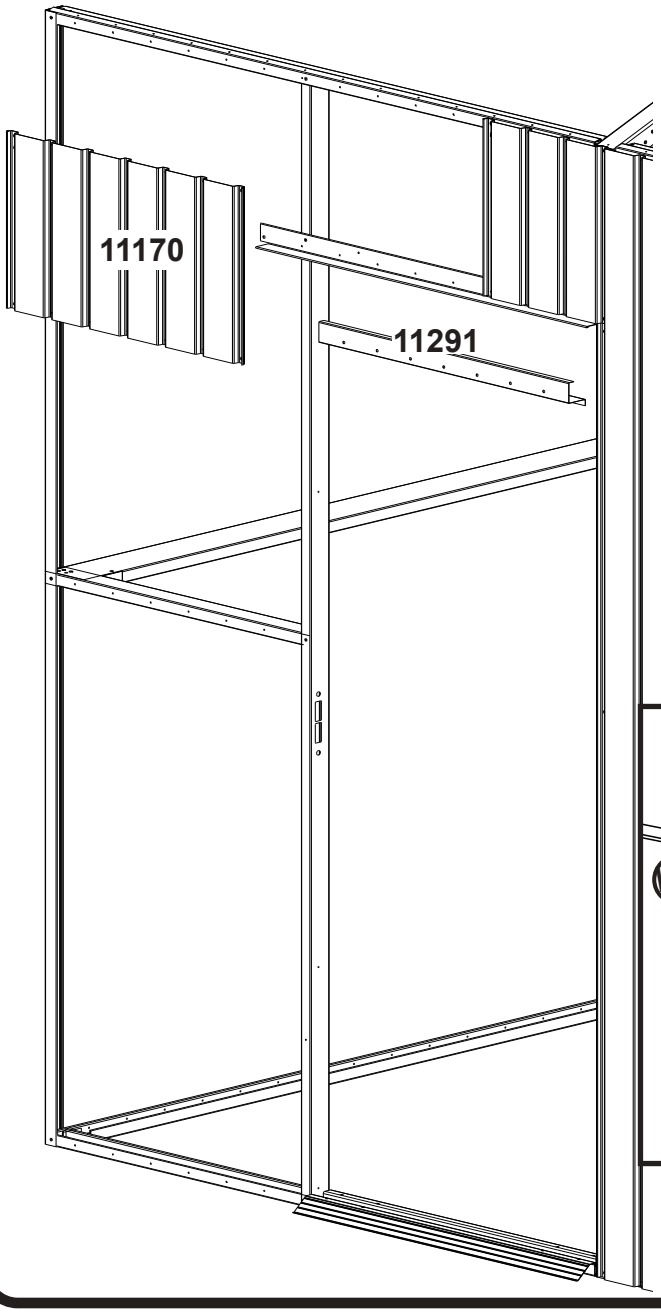

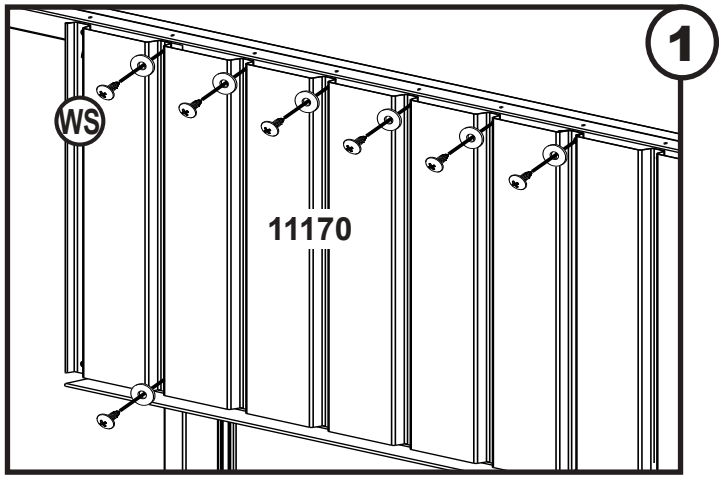

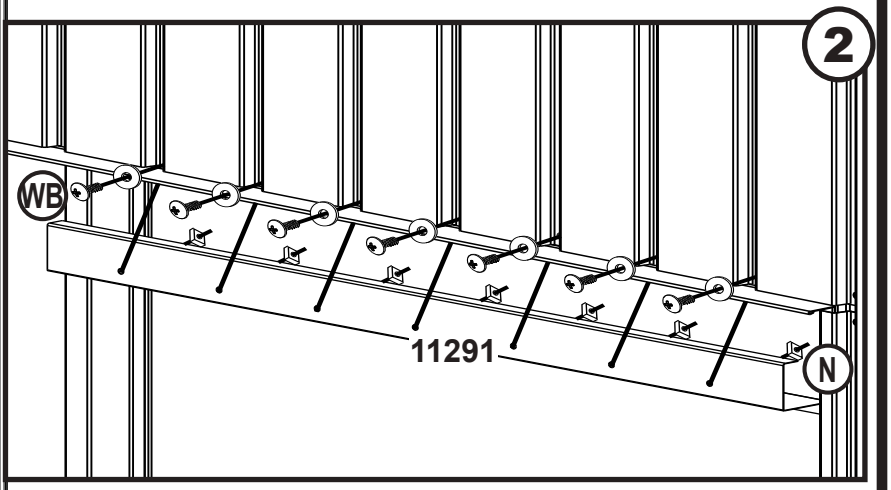

Step 13C

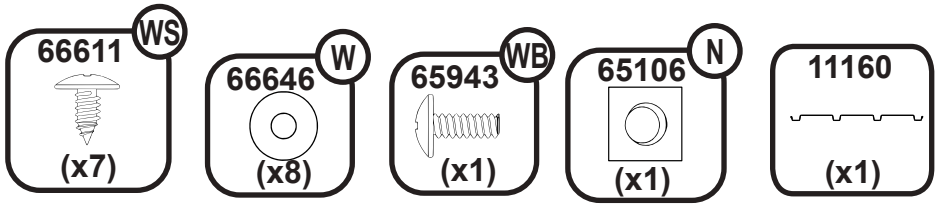

NOTE Painted fasteners are to be used on painted parts only. Make sure painted fasteners match wall color.

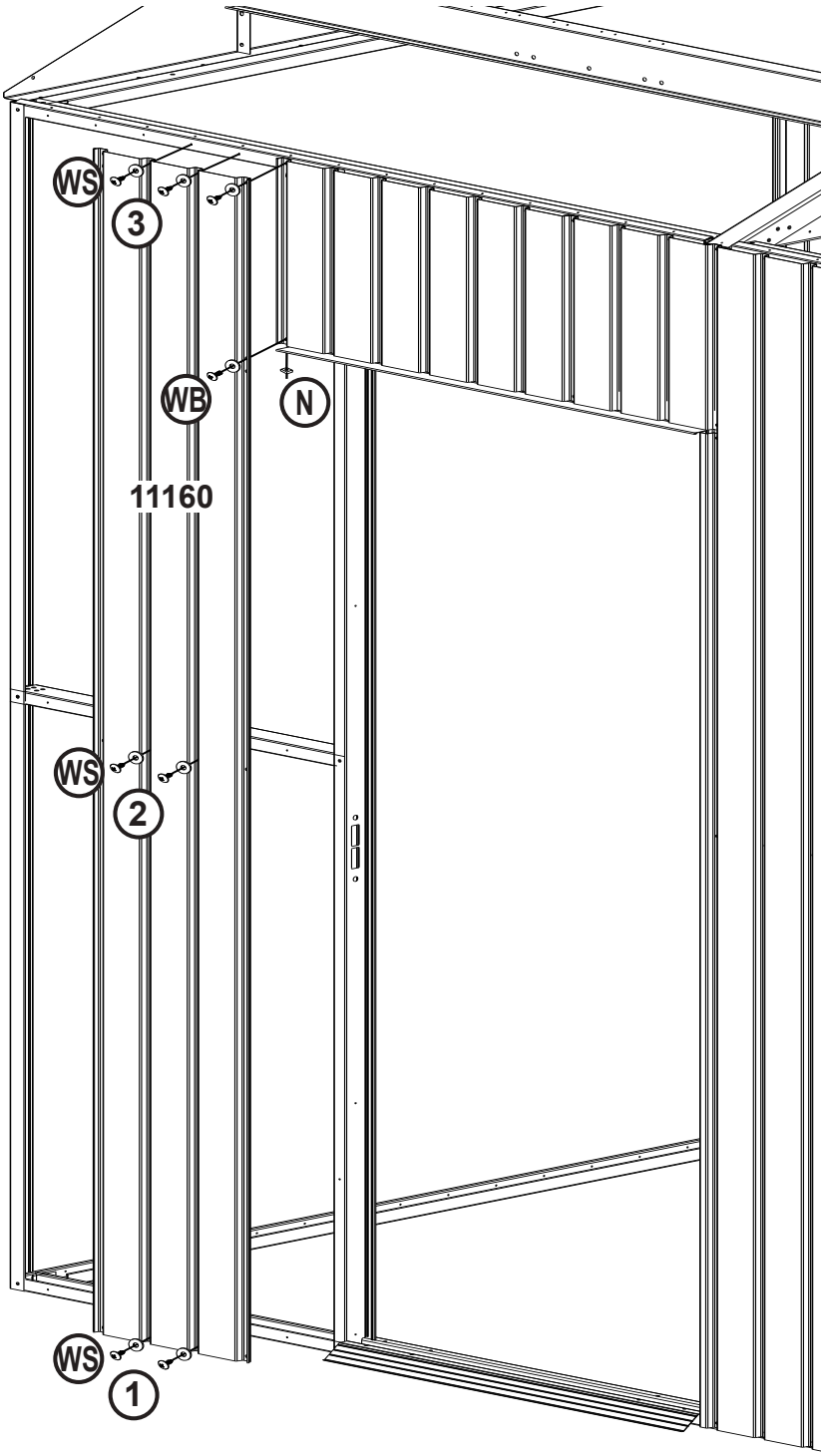

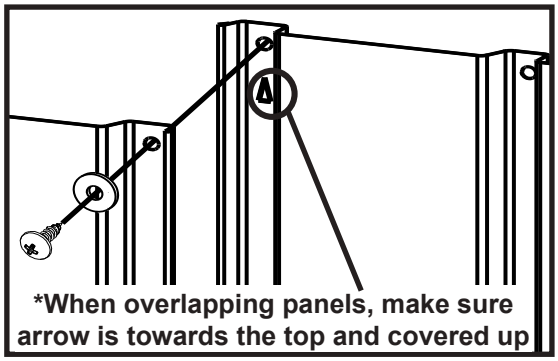

Step 13D

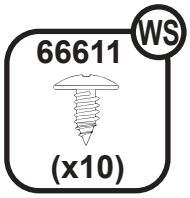

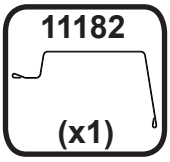

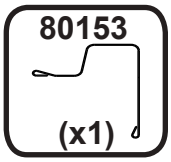

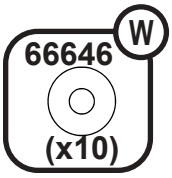

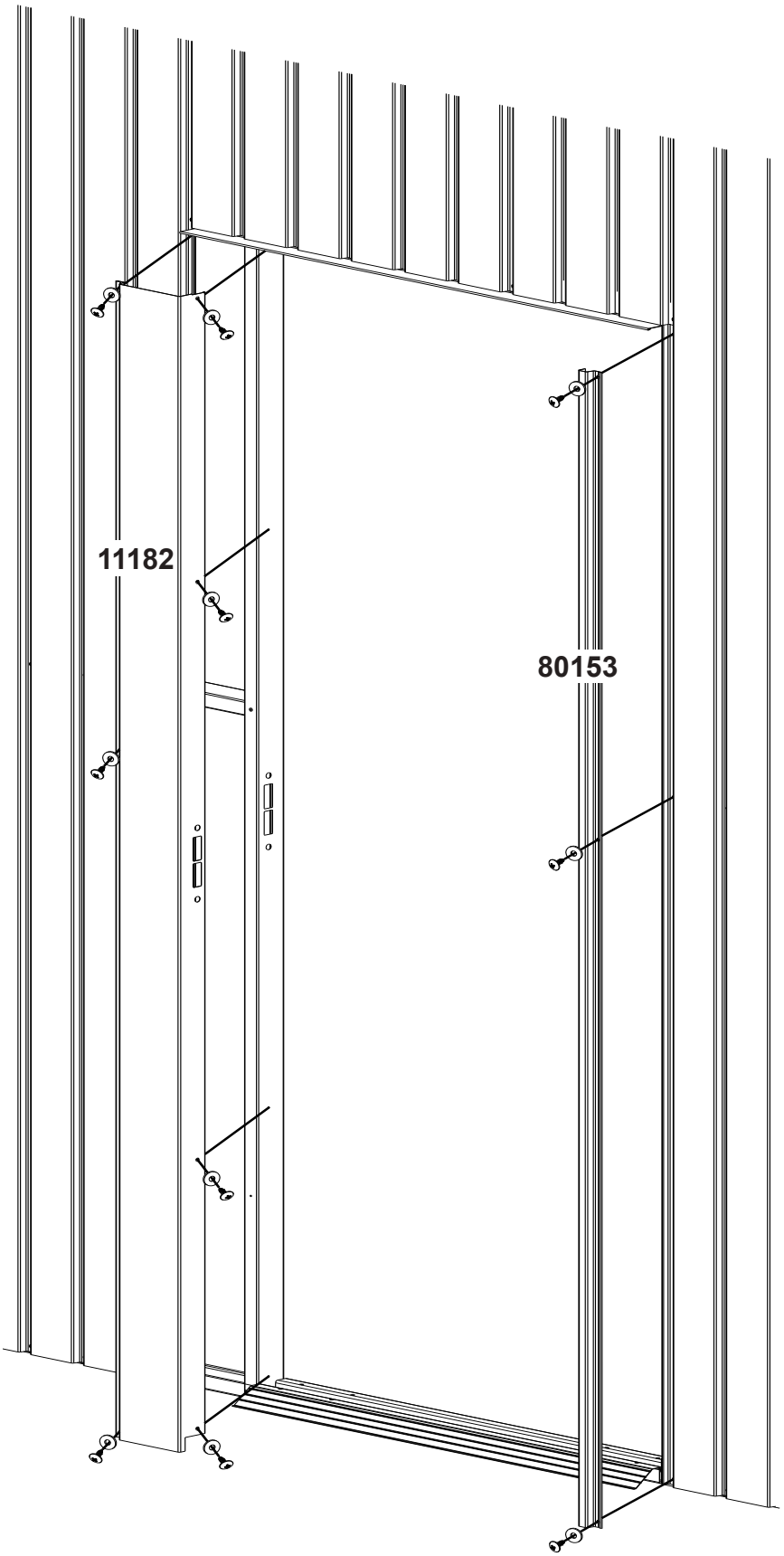

Step 14

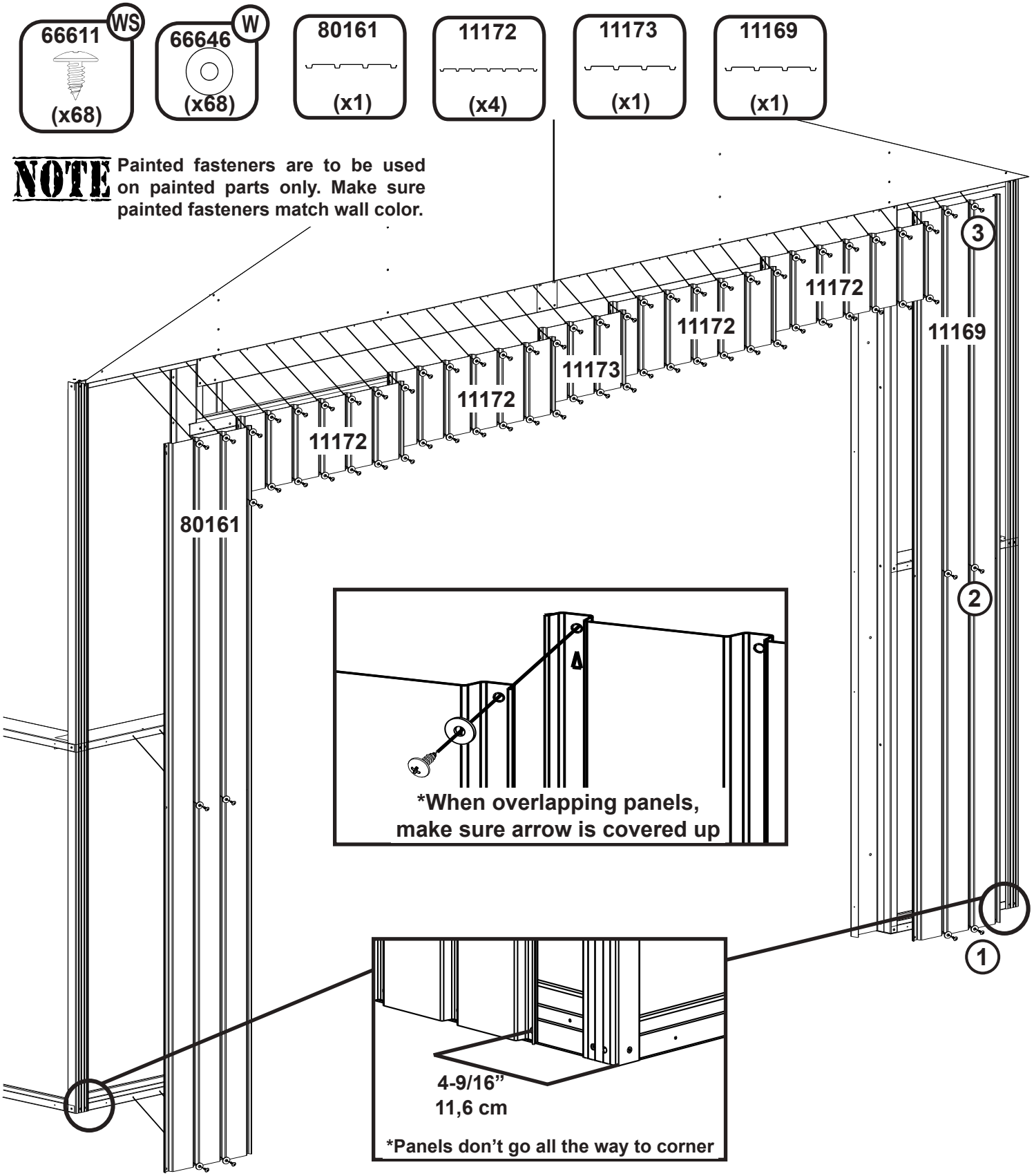
66611 WS
(x68)
66646 W
(x68)
80161
(x1)
11172
(x4)
11173
(x1)
11169
(x1)
NOTE
Painted fasteners are to be used on painted parts only. Make sure painted fasteners match wall color.
3
11172
11172
11169
11173
11172
11172
80161
2
*When overlapping panels, make sure arrow is covered up
1
4-9/16”
11,6 cm
*Panels don’t go all the way to corner

Step 15

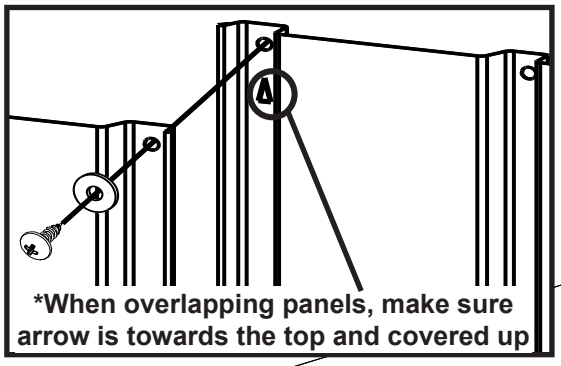

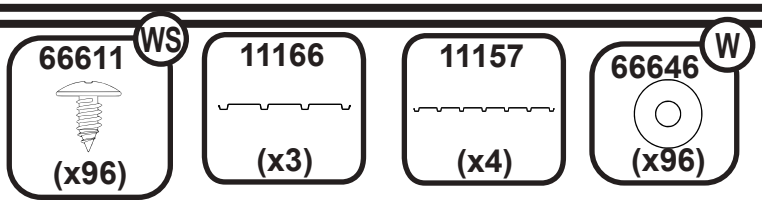

NOTE Painted fasteners are to be used on painted parts only. Make sure painted fasteners match wall color.

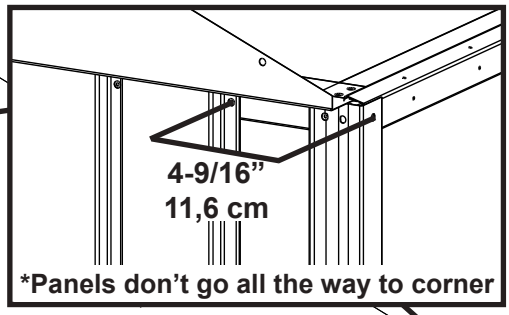

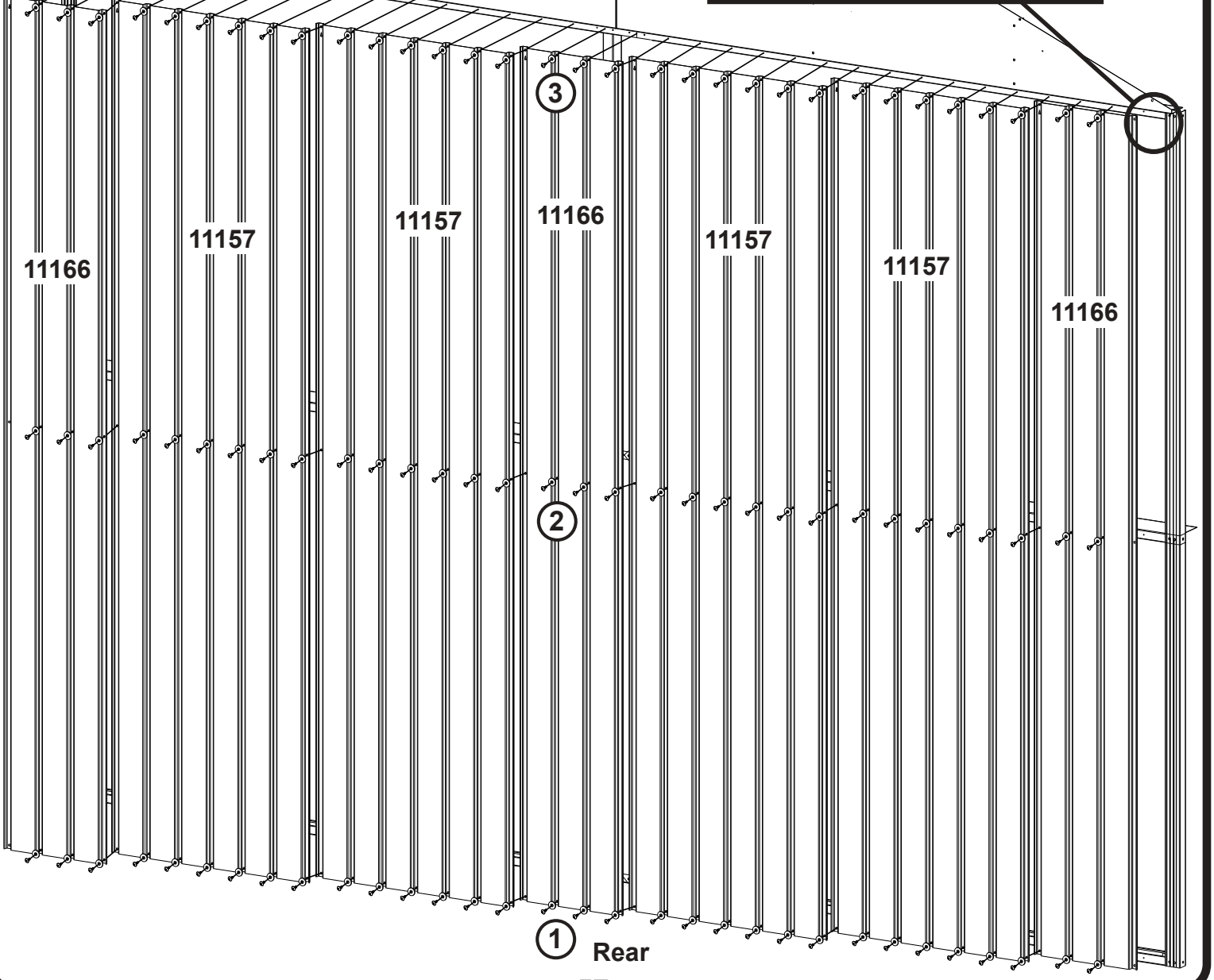

Step 16A

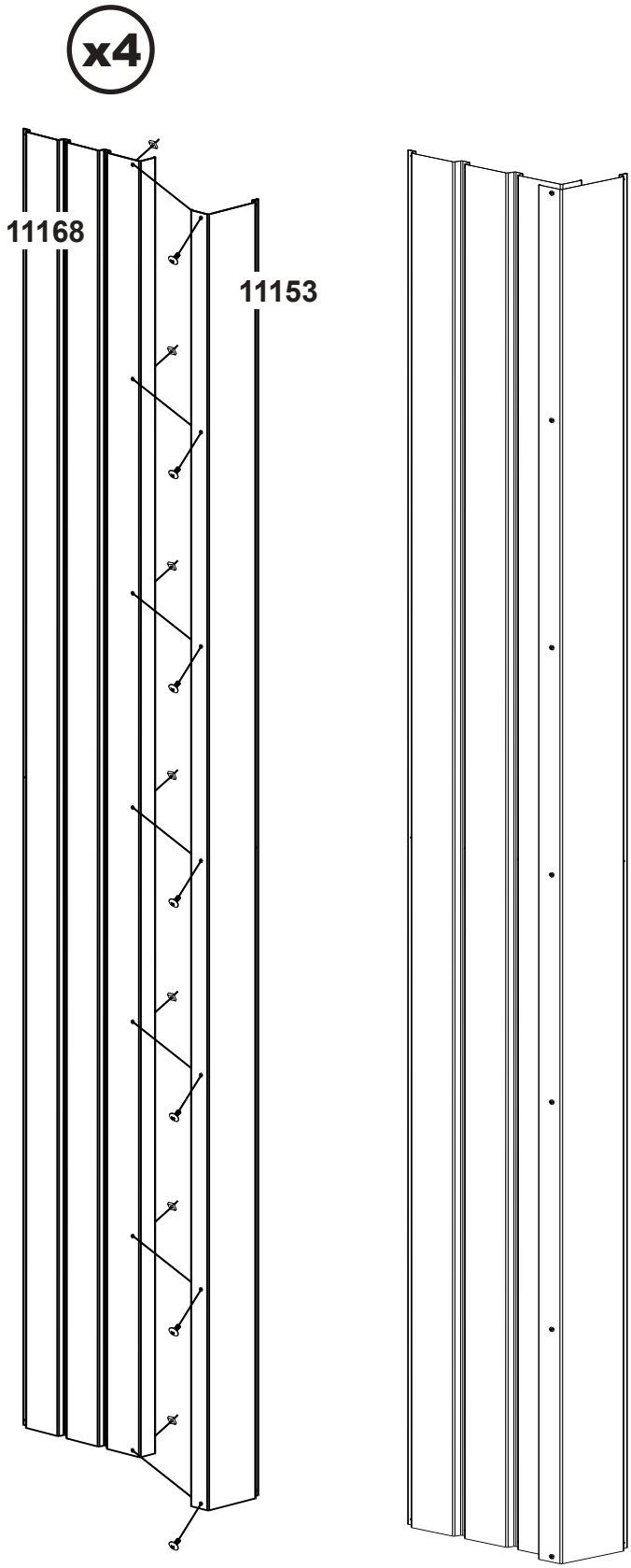

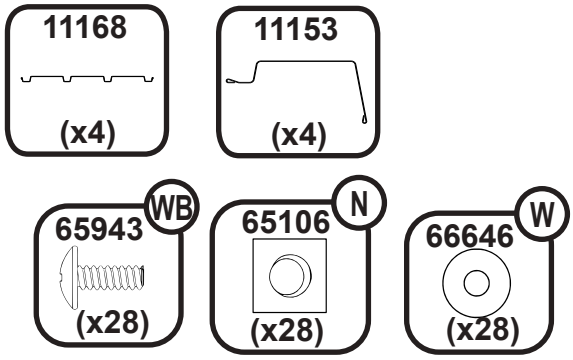

NOTE **Painted fasteners are to be used on painted parts only. Make sure painted fasteners match wall color.**

Step 16B

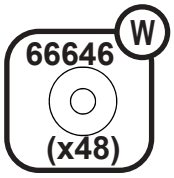

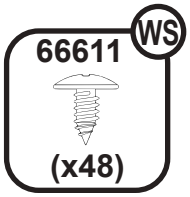

NOTE Painted fasteners are to be used on painted parts only. Make sure painted fasteners match wall color.

Install the corner panel subassemblies to each of the 4 corners.

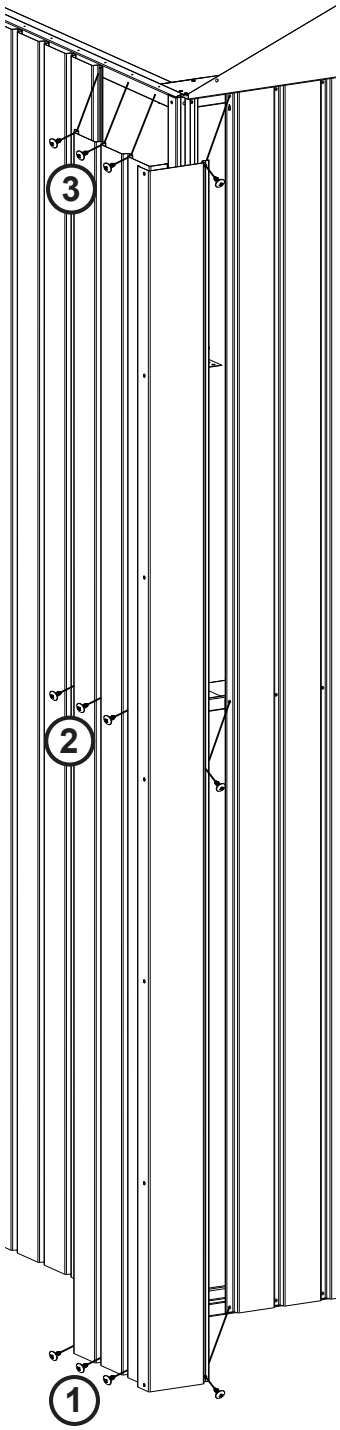

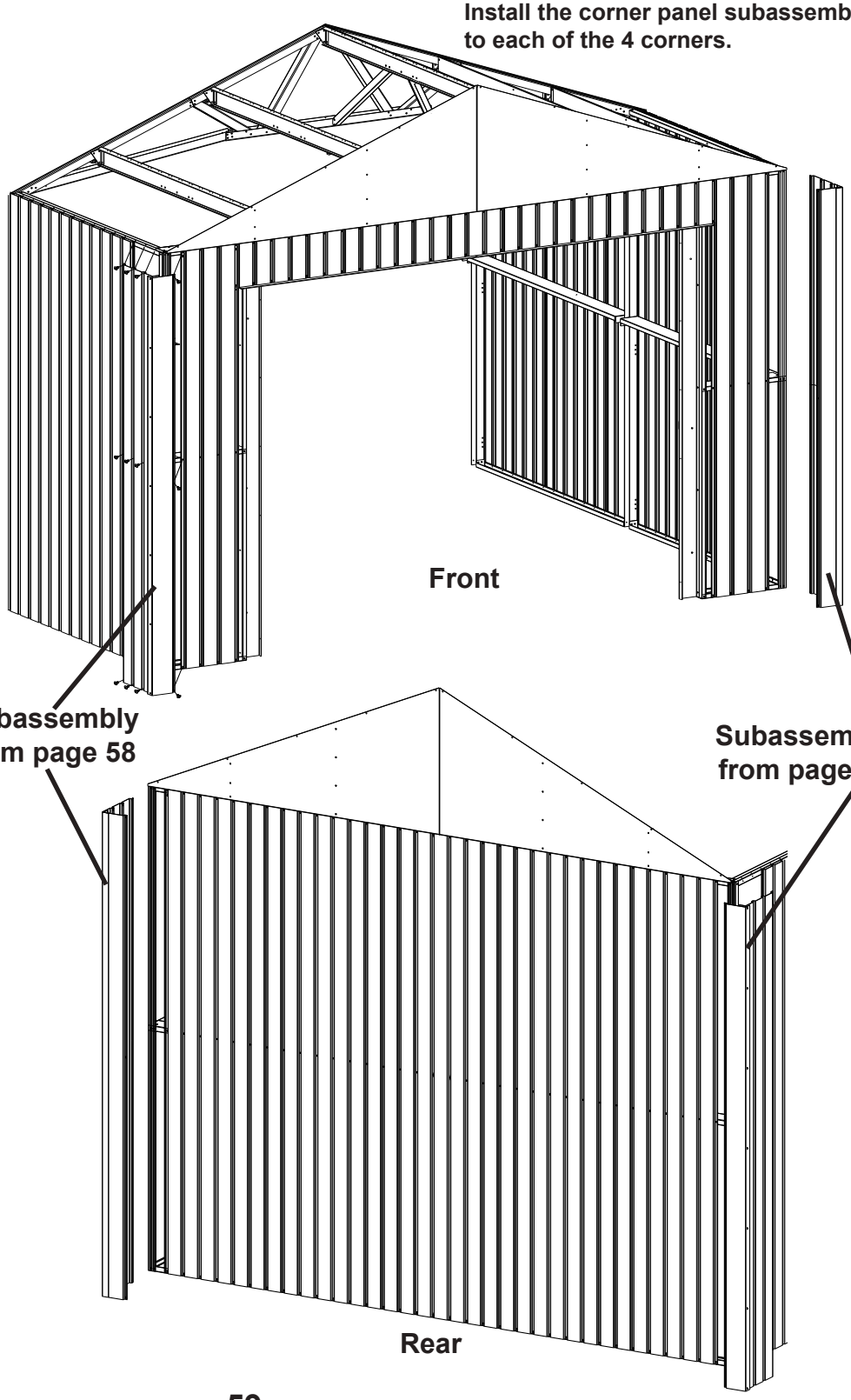

Roof Panel Orientation

12x10

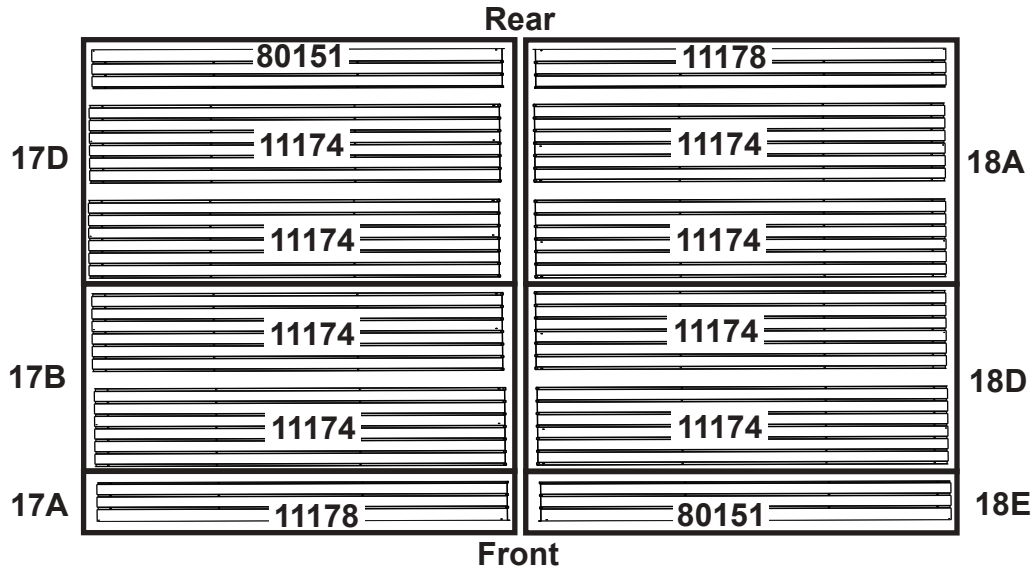

12x15

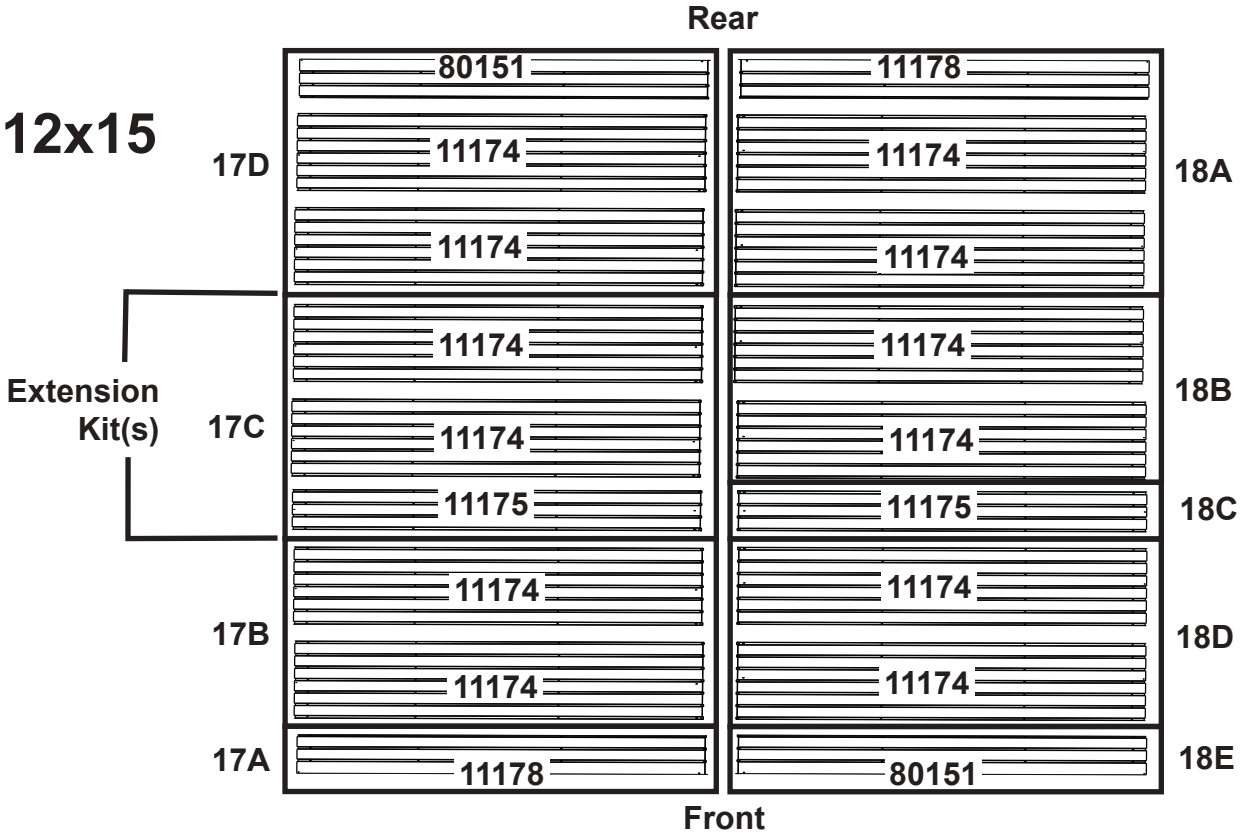

Step 17A

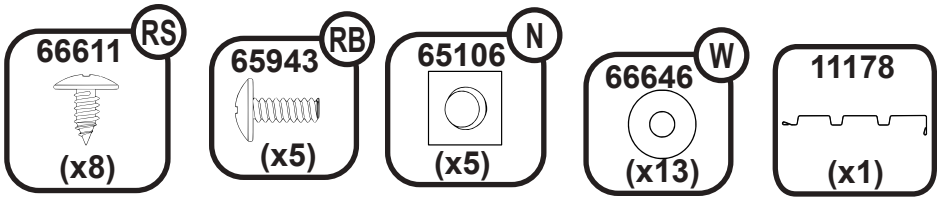

NOTE Use painted fasteners that match roof panel color

11178

Front

RS

RB

N

69835

Step 17B

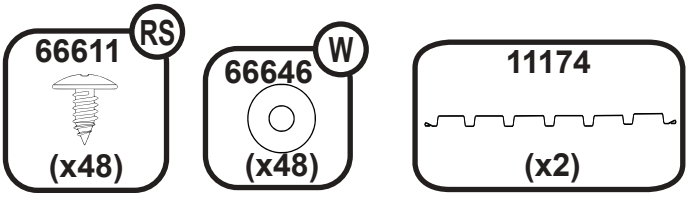

NOTE Use painted fasteners that match roof panel color

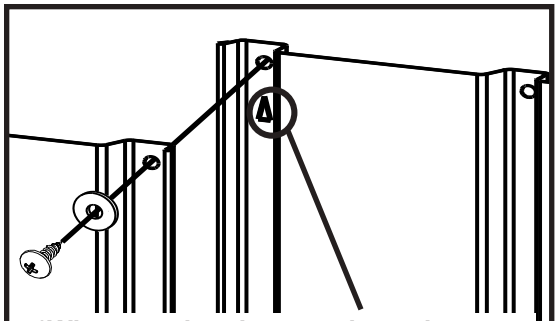

*When overlapping panels, make sure arrow is towards the top and covered up

11174

11174

Front

Step 17C

Extension x1

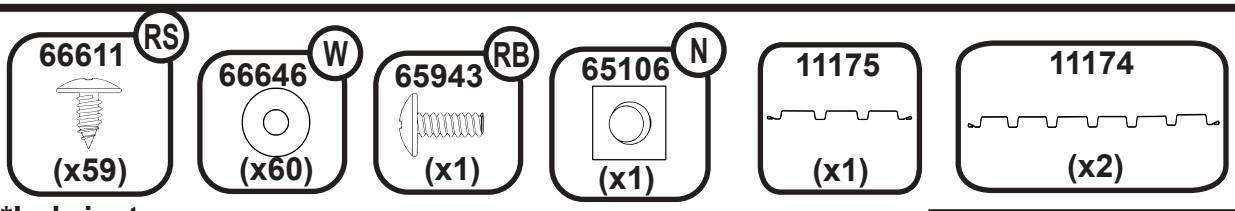

12x15+

***Lubricate screws to aid assembly**

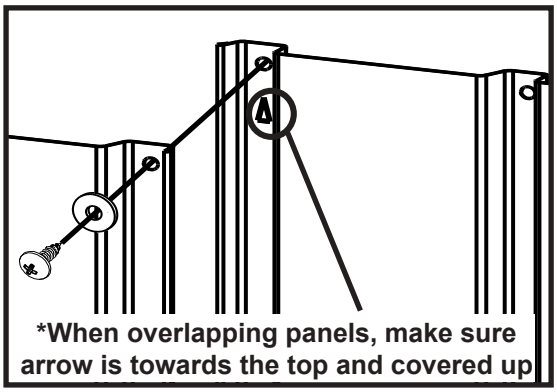

***When overlapping panels, make sure arrow is towards the top and covered up**

NOTE Use painted fasteners that match roof panel color

Install panels in this order for every 5' extension section

***Use bolt for top of truss**

RS

* RB

N

11174

11174

11175

Step 17D

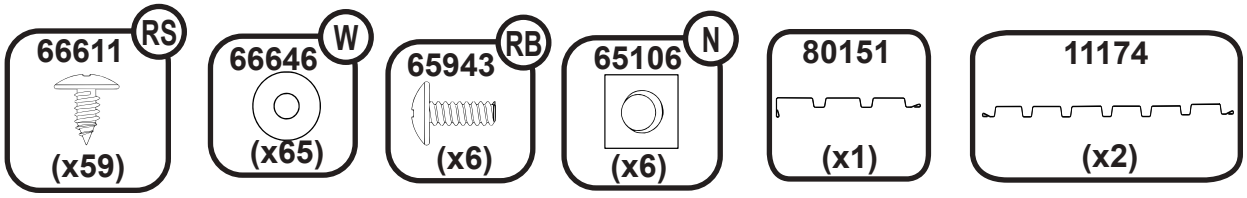

NOTE Use painted fasteners that match roof panel color

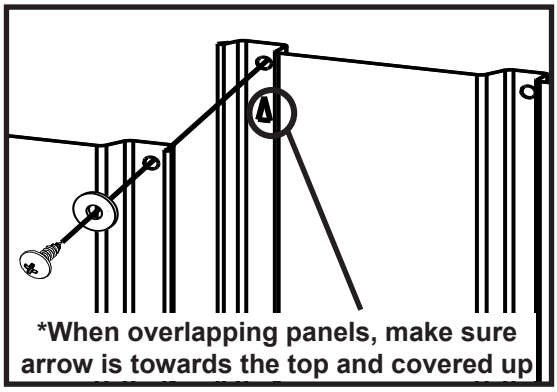

*When overlapping panels, make sure arrow is towards the top and covered up

*Use bolt for top of truss

Rear

80151

11174

11174

RS

RB

*

N

RB

N

69835

Step 18A

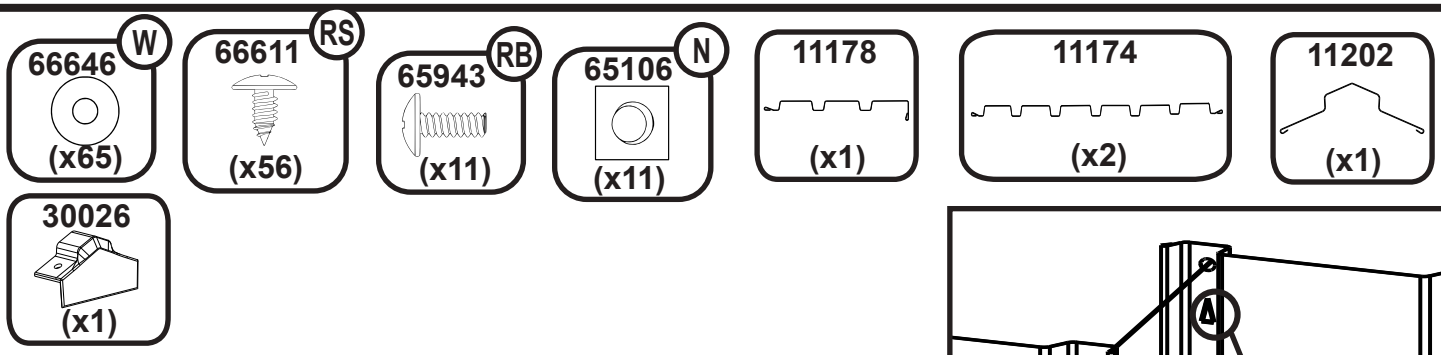

NOTE Use painted fasteners that match roof panel color

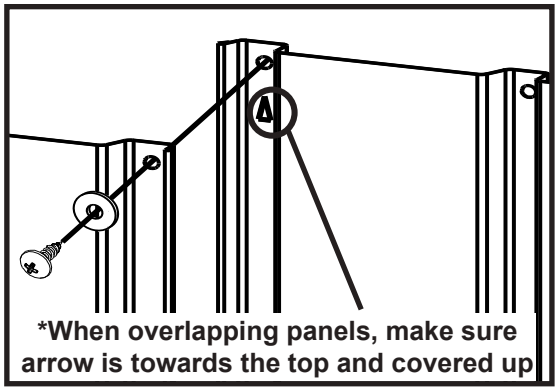

*When overlapping panels, make sure arrow is towards the top and covered up

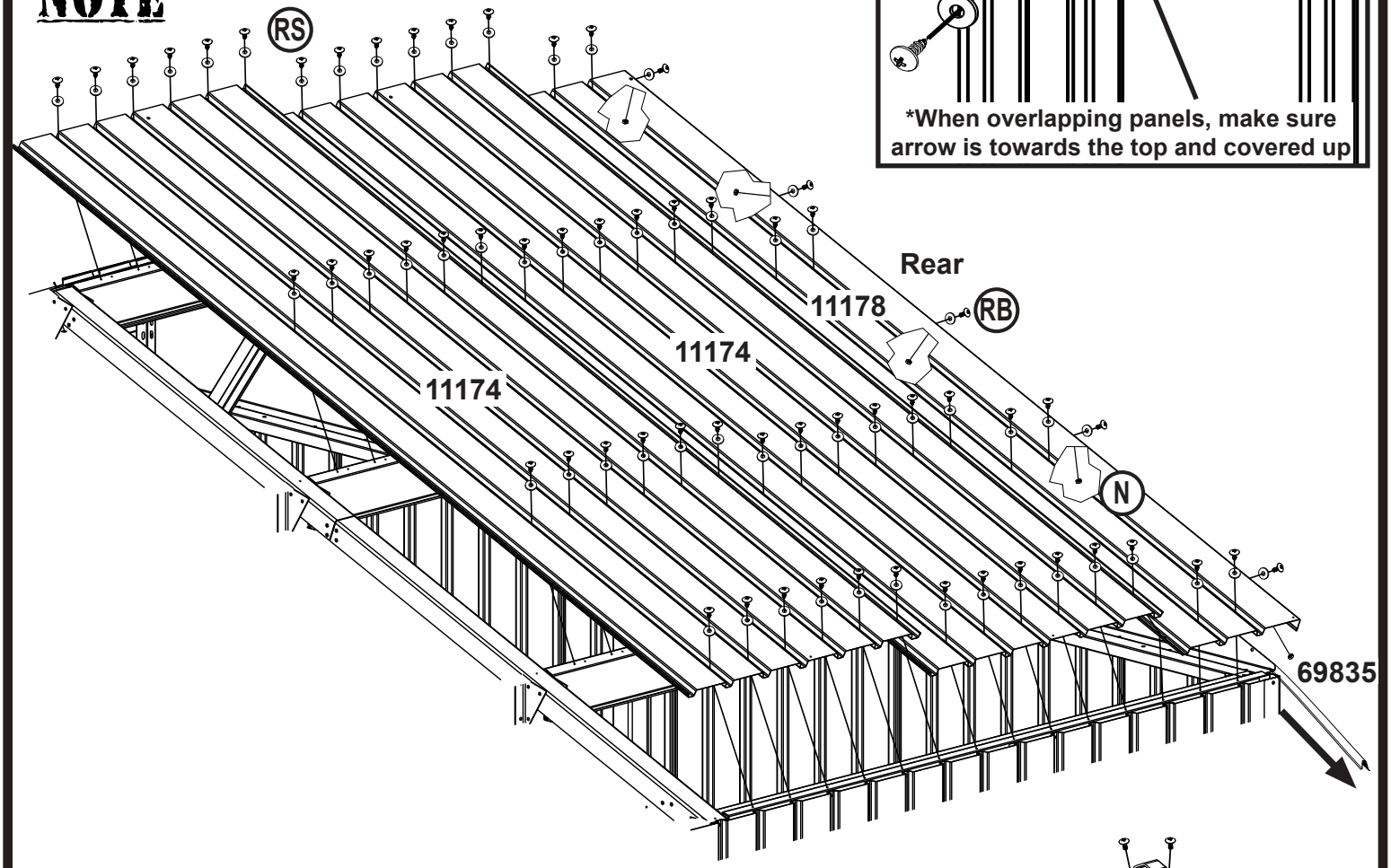

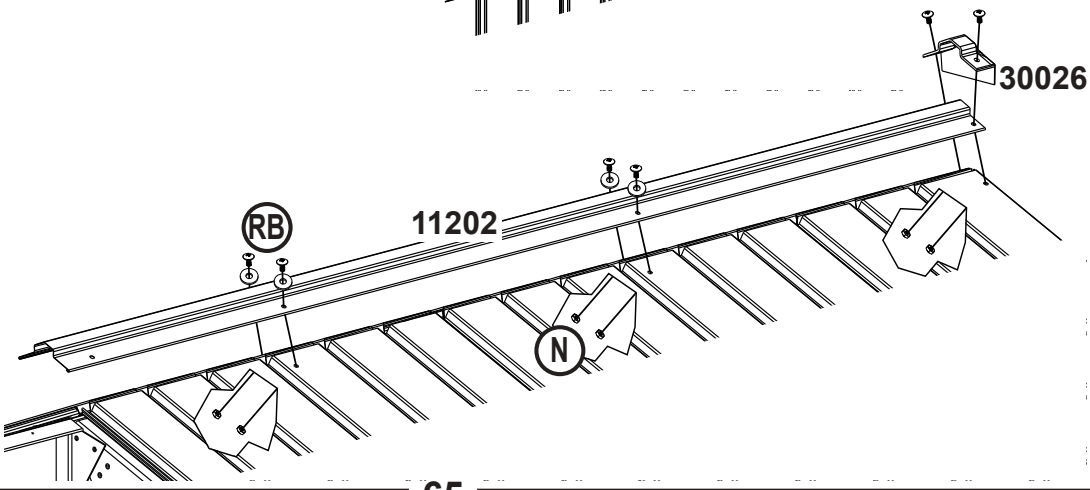

Step 18B

Extension x1

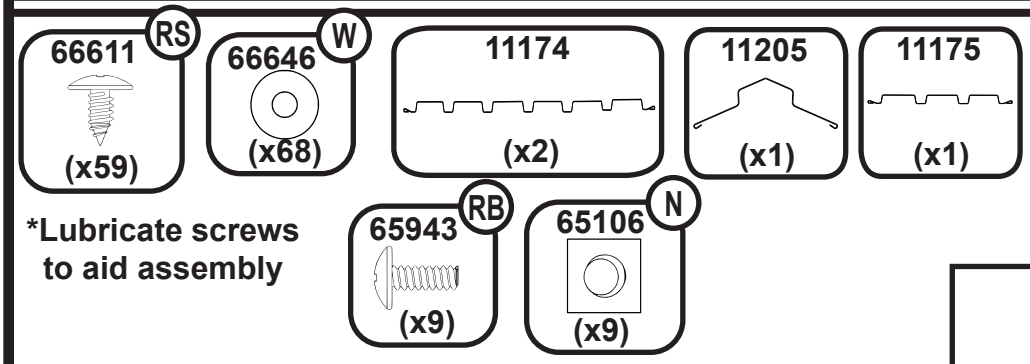

12x15+

*Lubricate screws to aid assembly

NOTE Use painted fasteners that match roof panel color

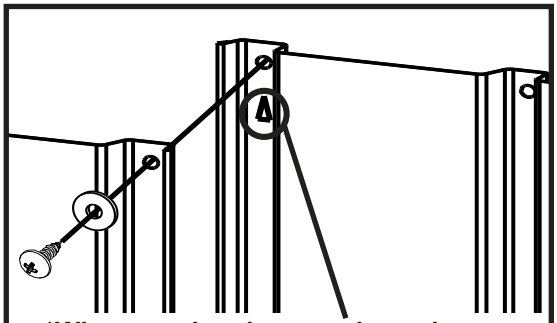

*When overlapping panels, make sure arrow is towards the top and covered up

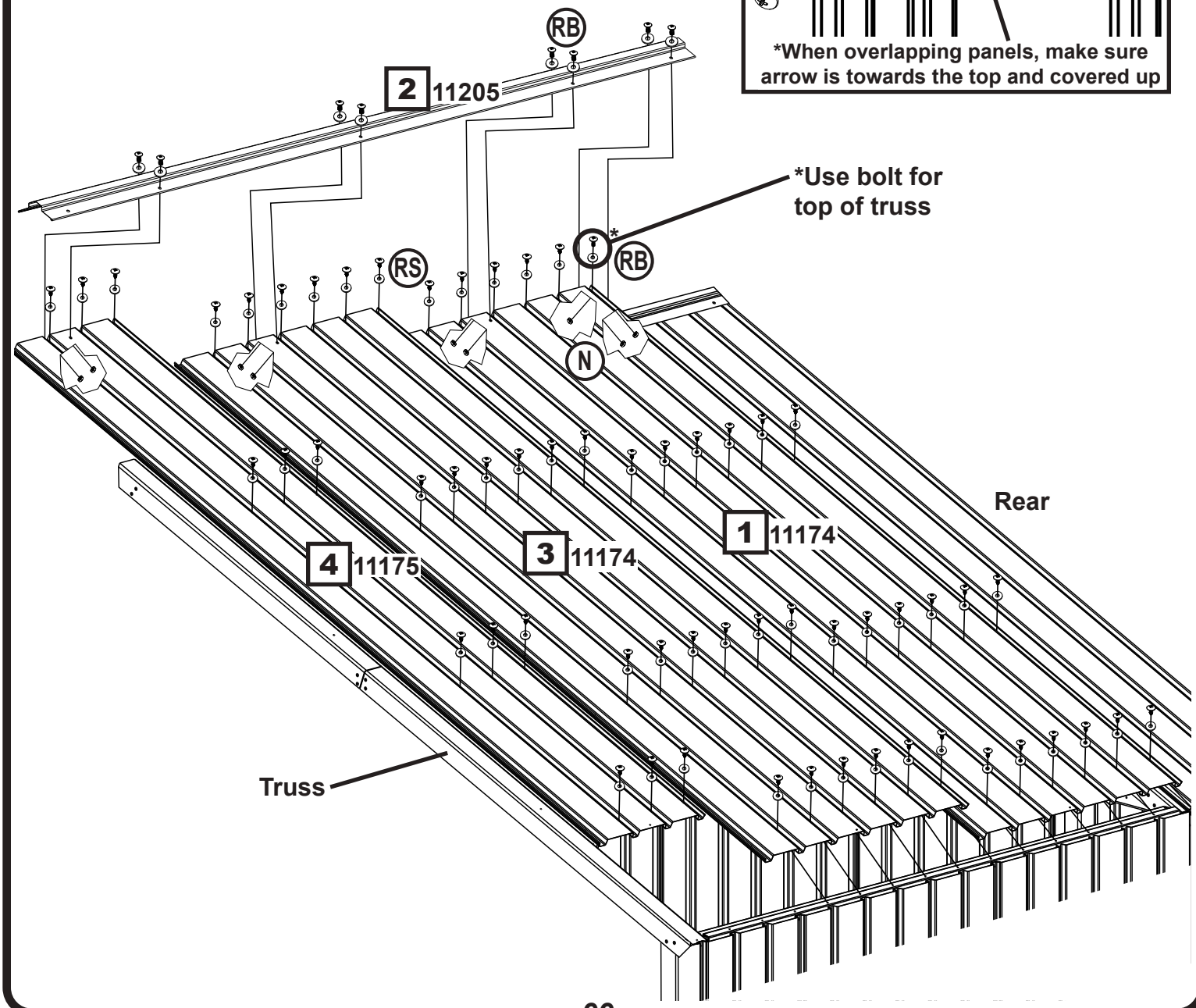

Step 18C

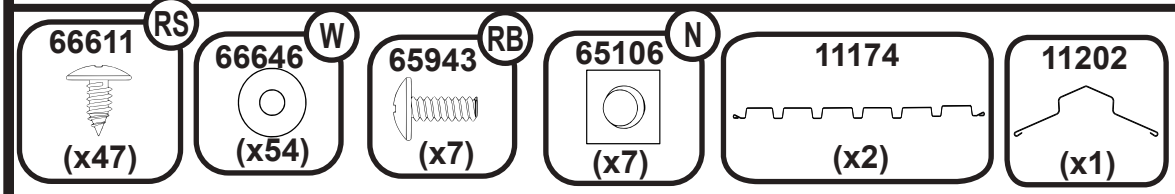

*Lubricate screws to aid assembly

NOTE Use painted fasteners that match roof panel color

*Use bolt for top of truss

11174

11174

Front

*When overlapping panels, make sure arrow is towards the top and covered up

11202

Step 18D

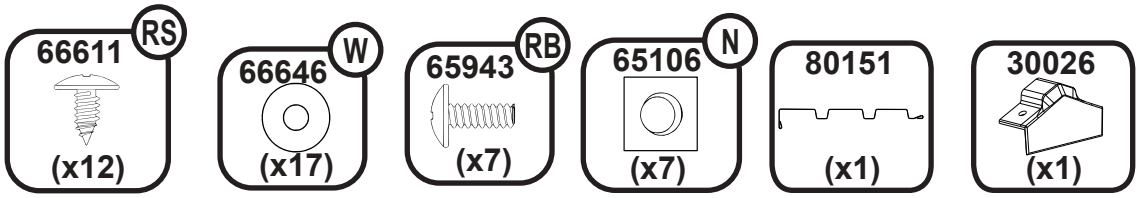

NOTE Use painted fasteners that match roof panel color

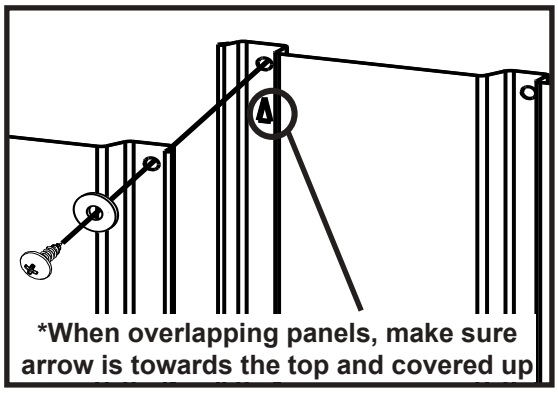

*When overlapping panels, make sure arrow is towards the top and covered up

RS

RB

Front

80151

N

69835

RB

30026

N

Step 19

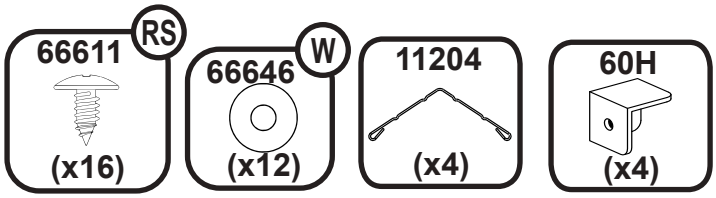

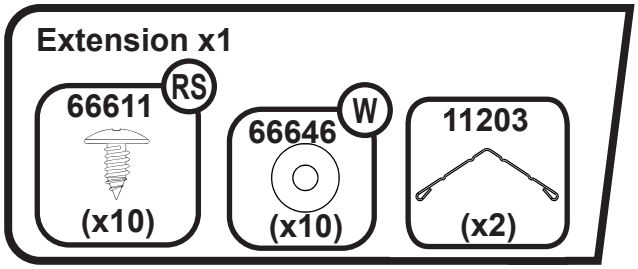

Install roof trim on both sides of the shed

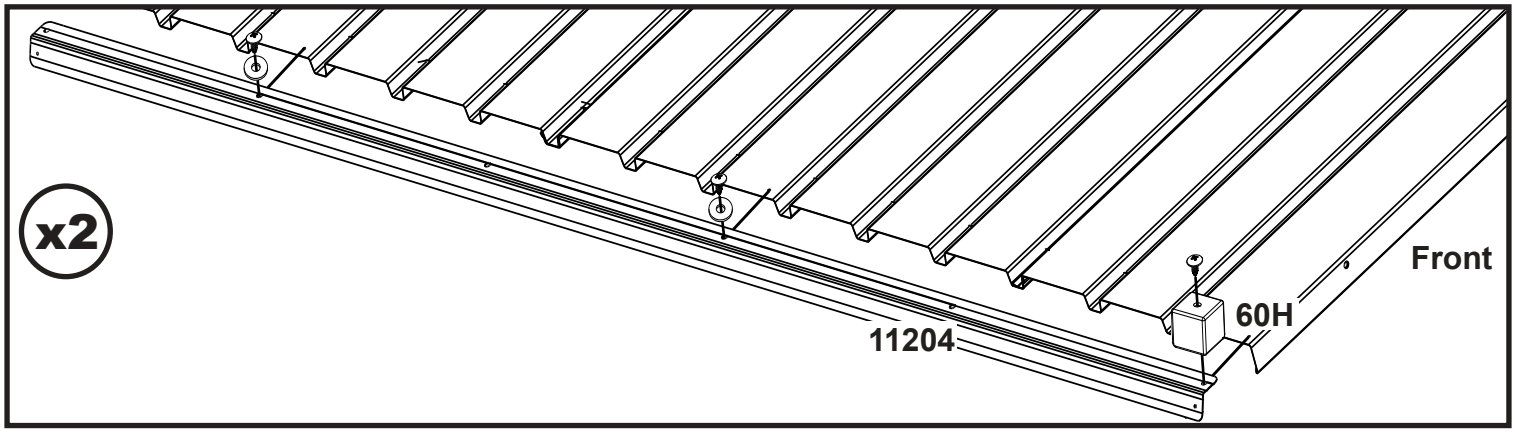

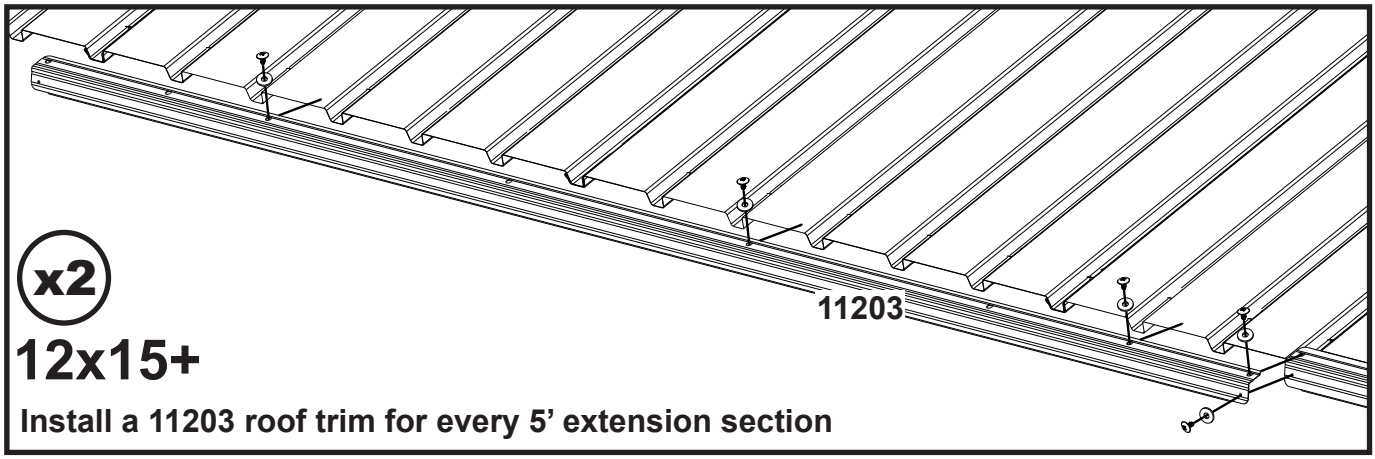

12x15+

Install a 11203 roof trim for every 5' extension section

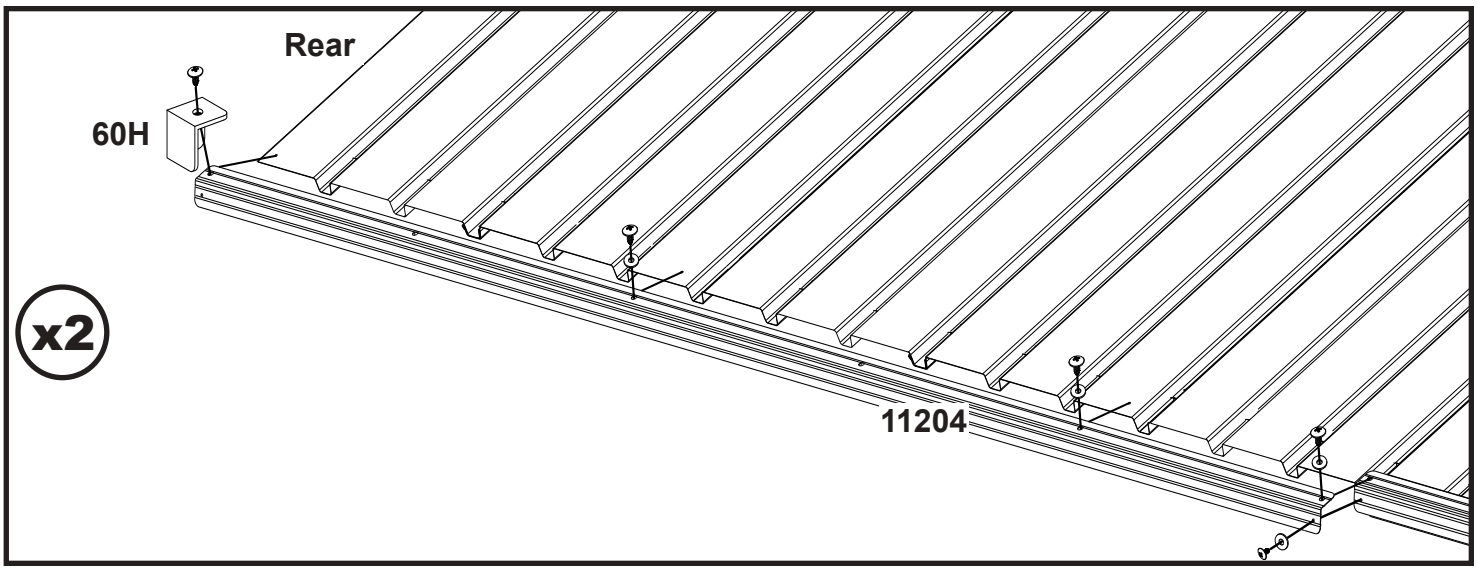

Step 20A

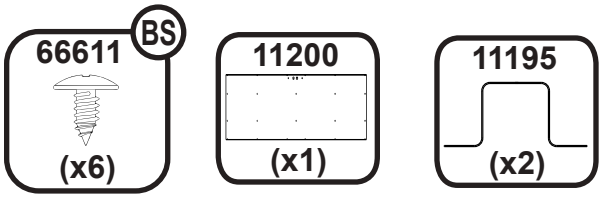

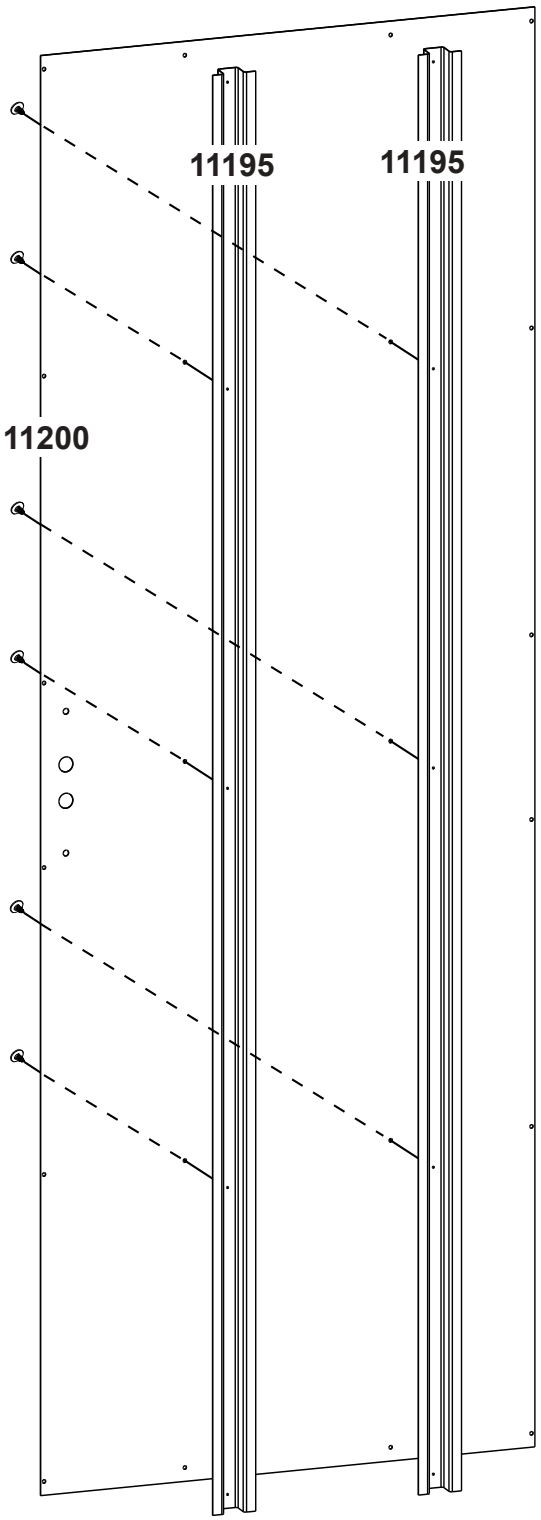

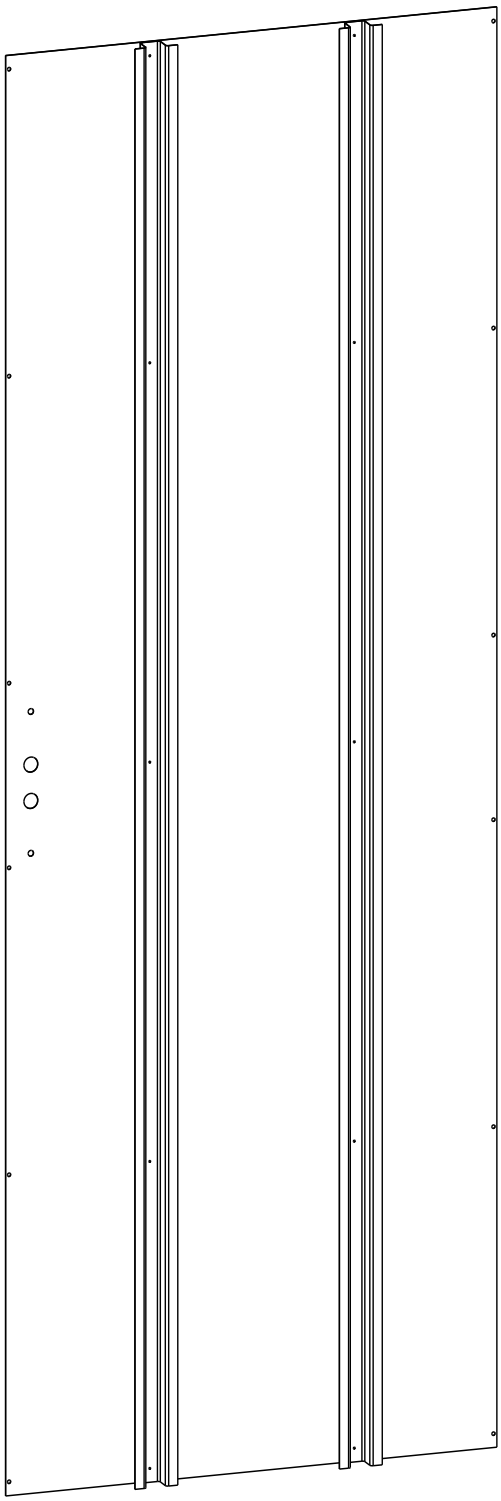

Step 20B

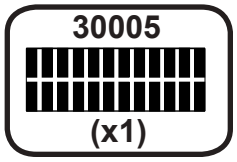

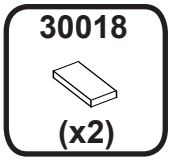

Once tape sticks to a surface it CAN NOT be removed.

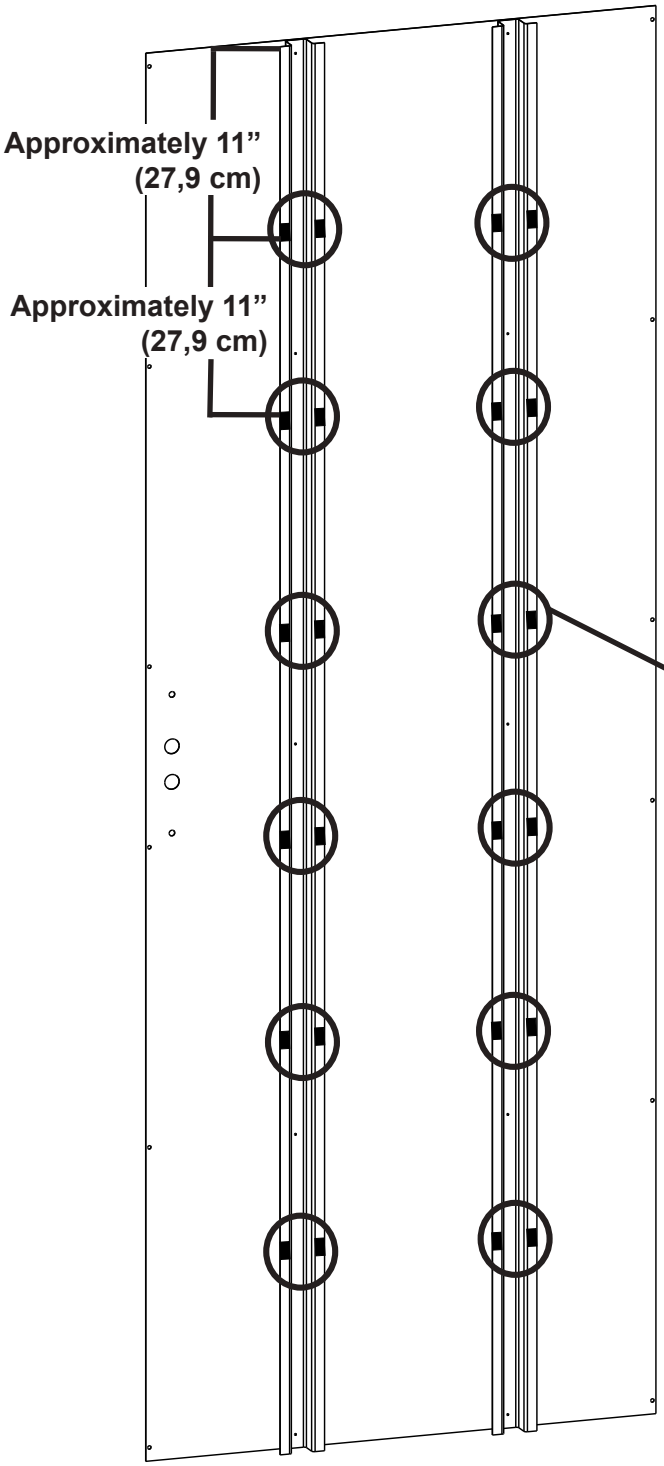

Wipe the legs of 11195 thoroughly with alcohol pads (30018) before applying tape (30005)

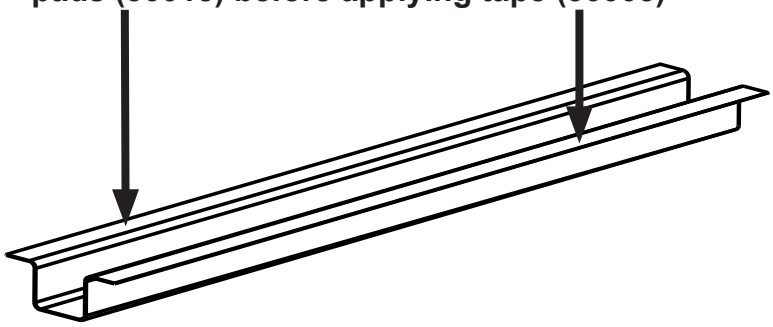

Press tape firmly along the door braces approximately 11” (27,9 cm) apart. DO NOT peel the backing off at this time.

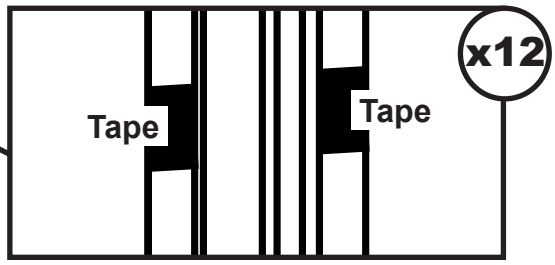

Step 20C

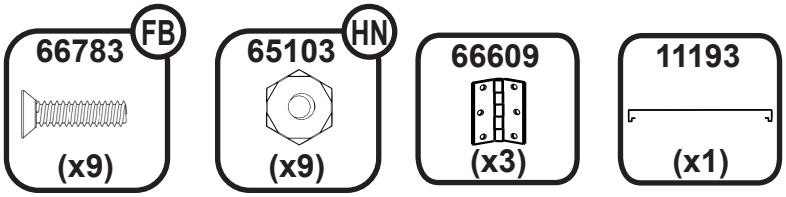

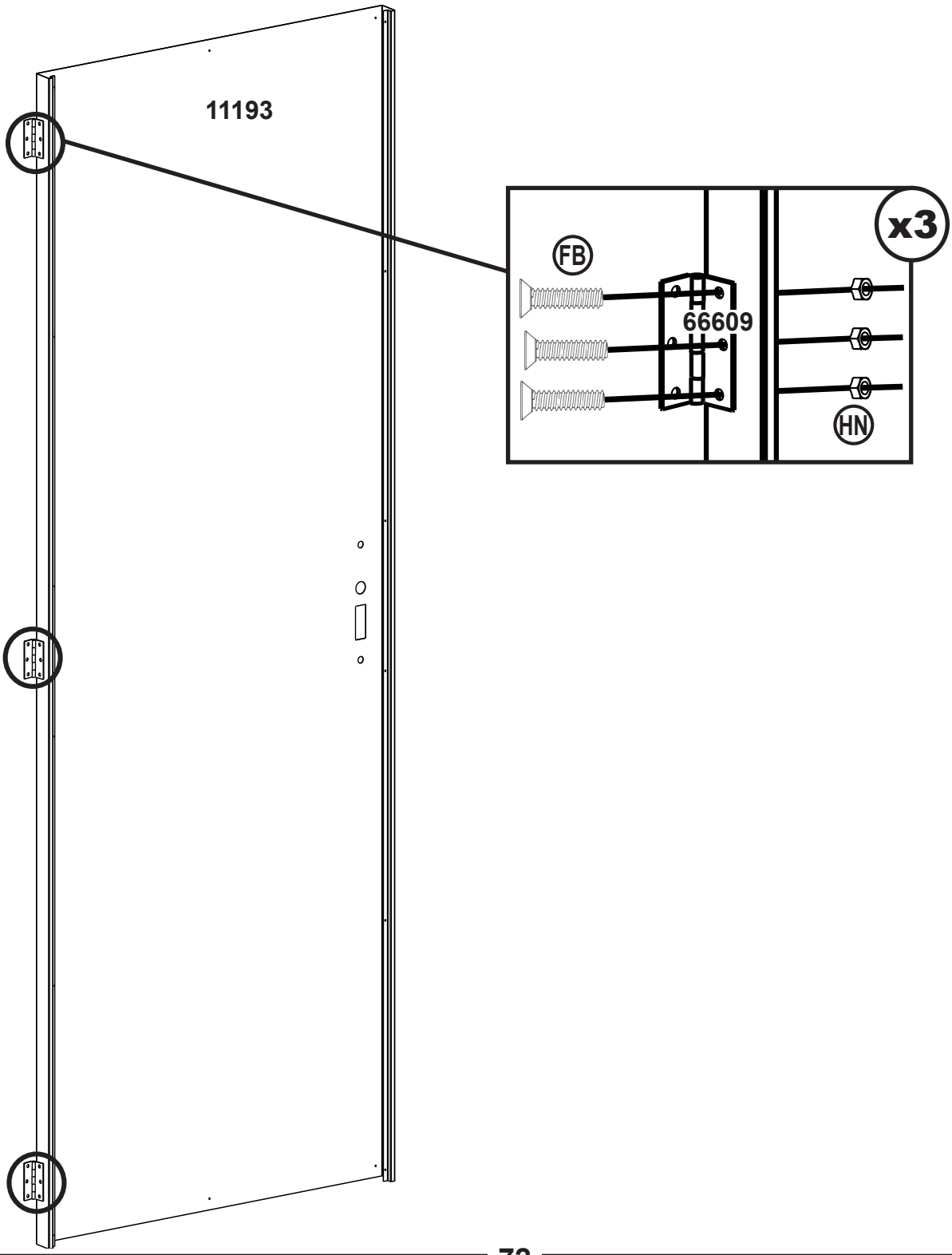

Step 20D

Use hardware supplied with handle assembly box (6PP30002) for this page

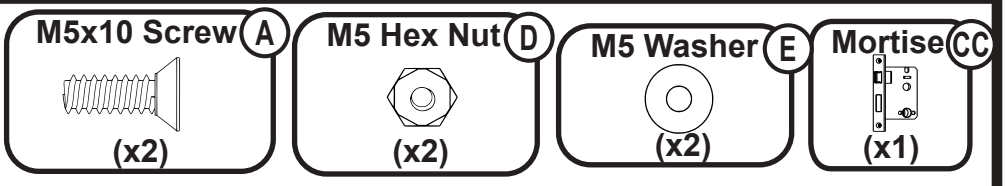

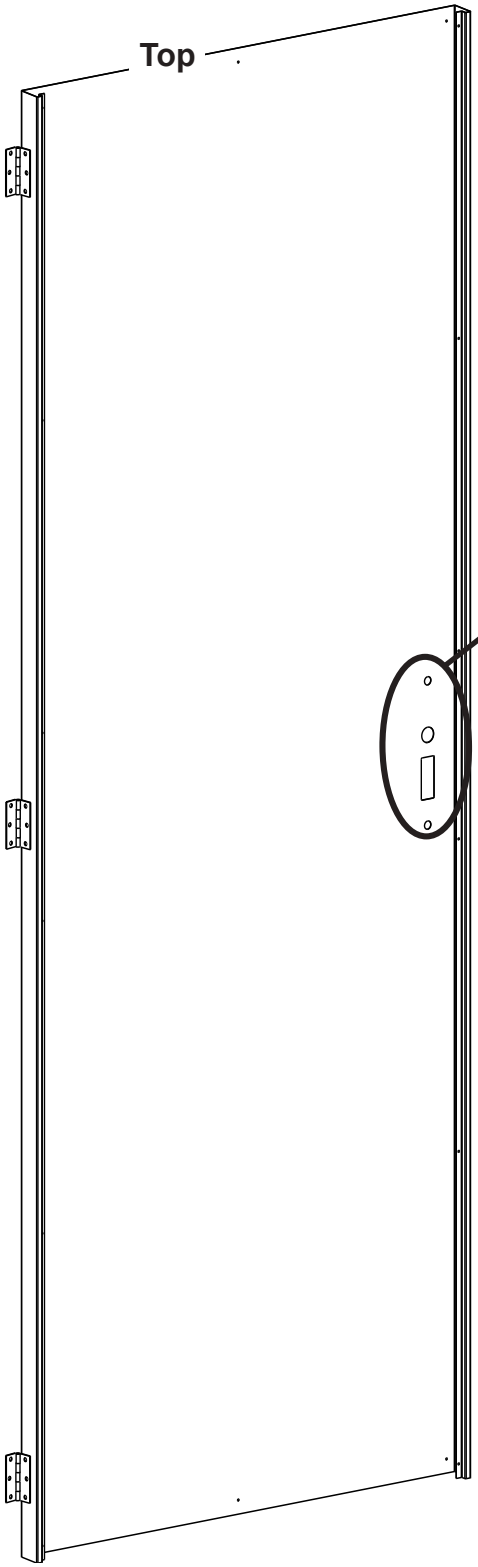

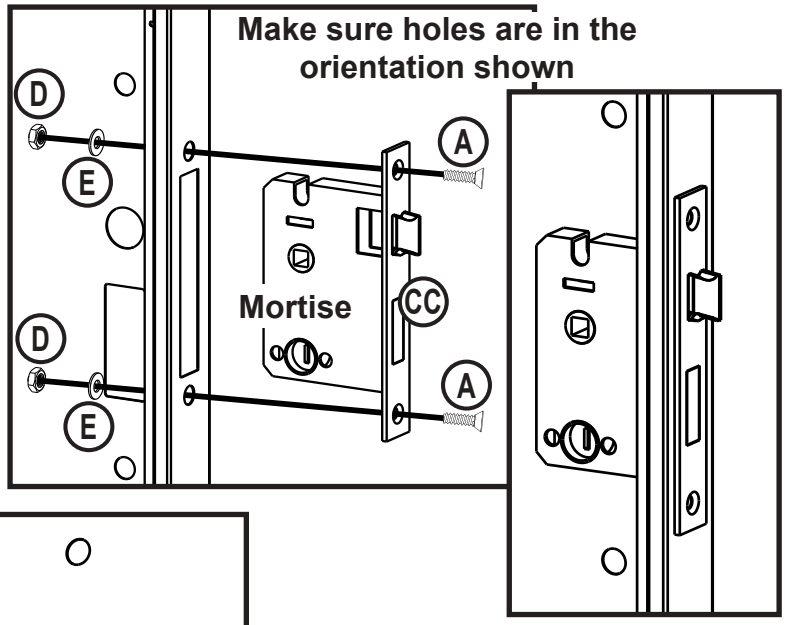

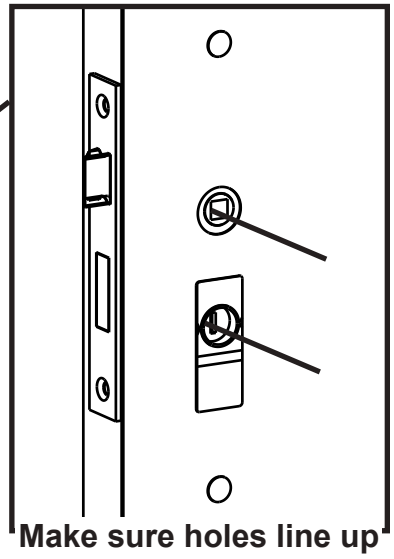

Door Latch Orientation Top View

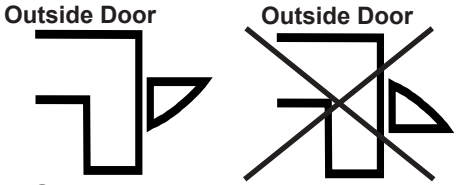

Correct Orientation

Incorrect Orientation

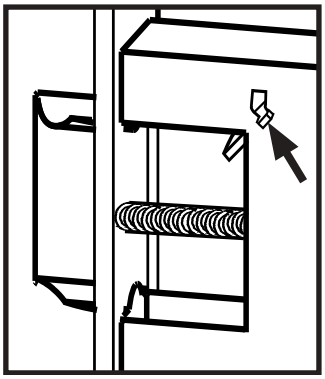

If door latch is in wrong orientation, push tab up

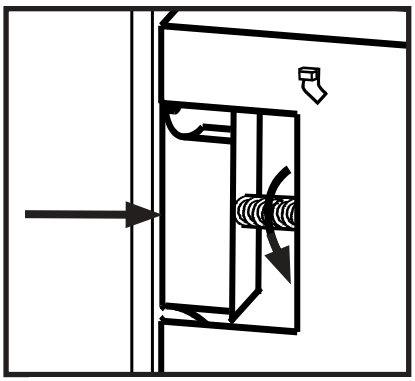

Push latch in and rotate to correct orientation

Step 20E

Peel off the backs of the tape before proceeding. Once tape sticks to a surface it CAN NOT be removed.

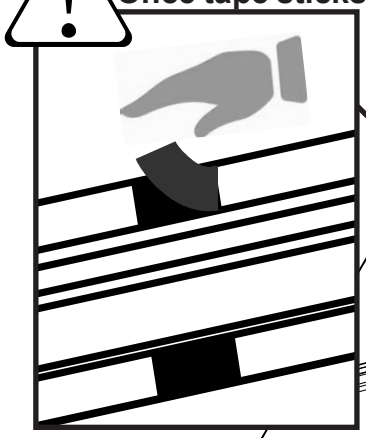

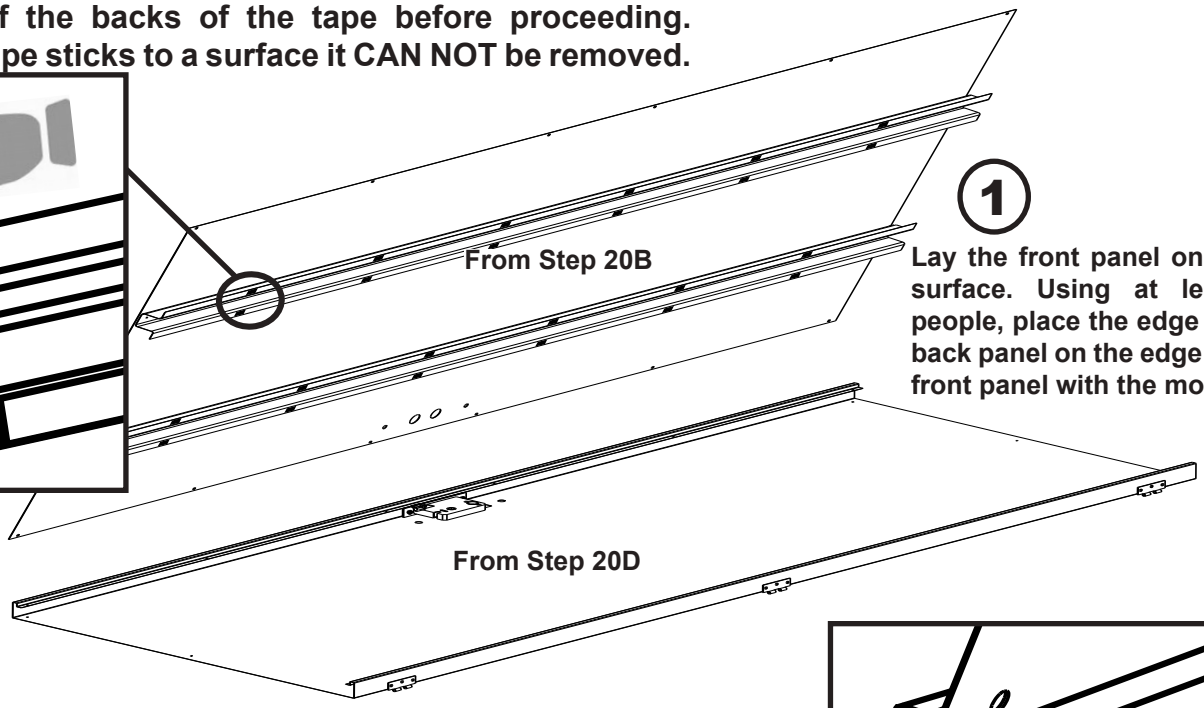

1

Lay the front panel on a flat surface. Using at least 2 people, place the edge of the back panel on the edge of the front panel with the mortise

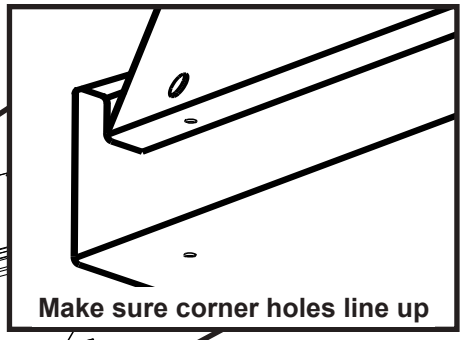

Make sure corner holes line up

2

Carefully lower the back panel down so that the tape makes contact with the front

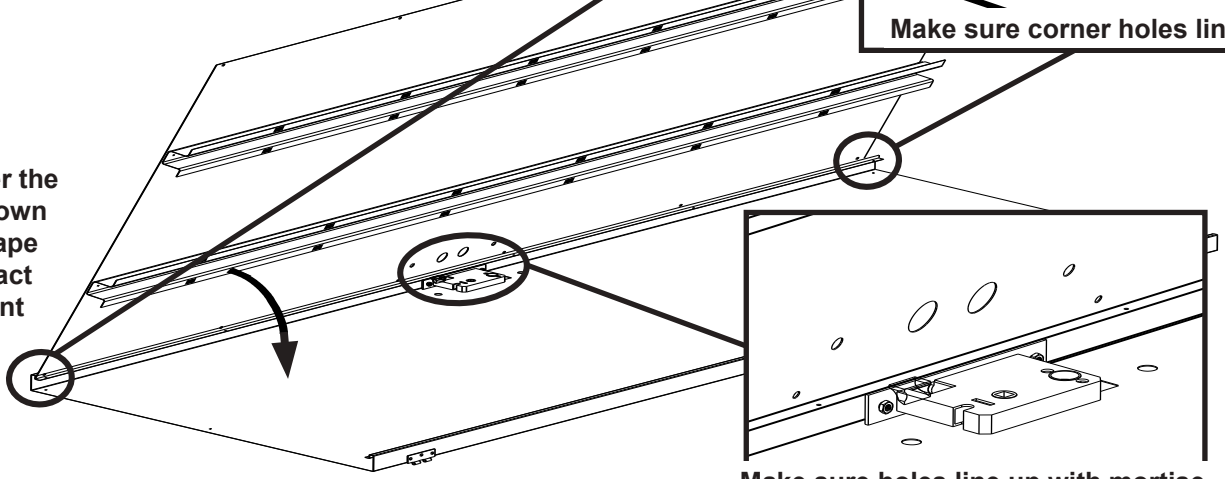

Make sure holes line up with mortise

3

Press down firmly

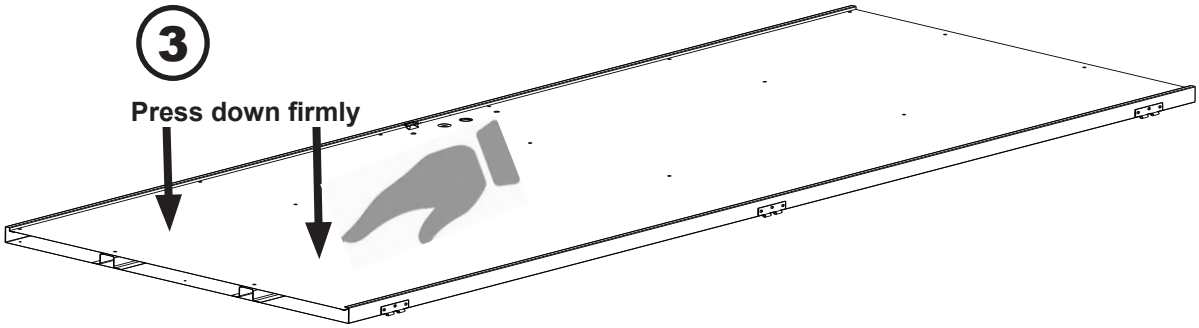

Step 20F

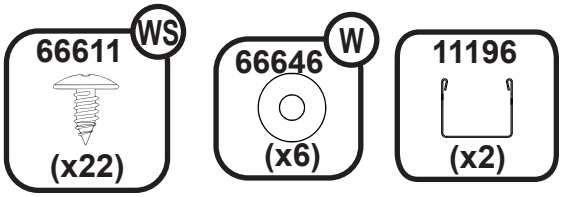

NOTE Use painted fasteners that match wall color

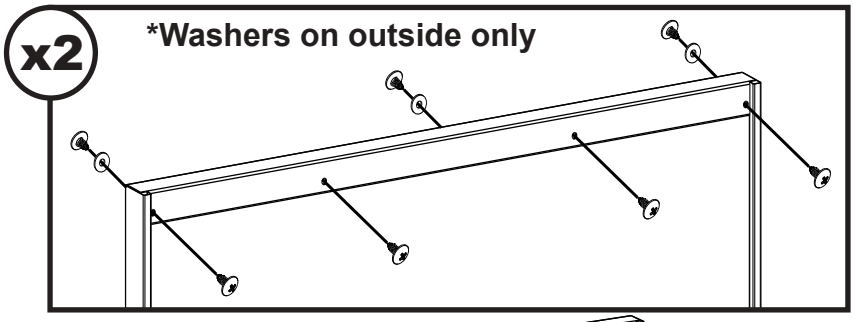

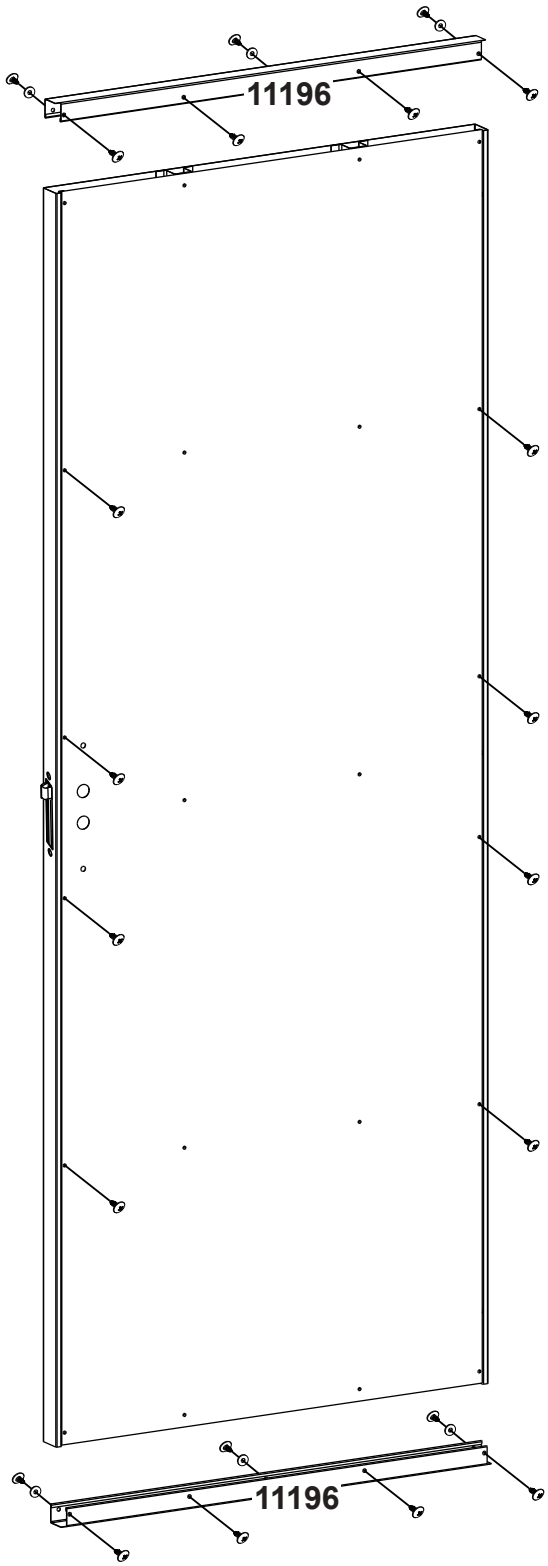

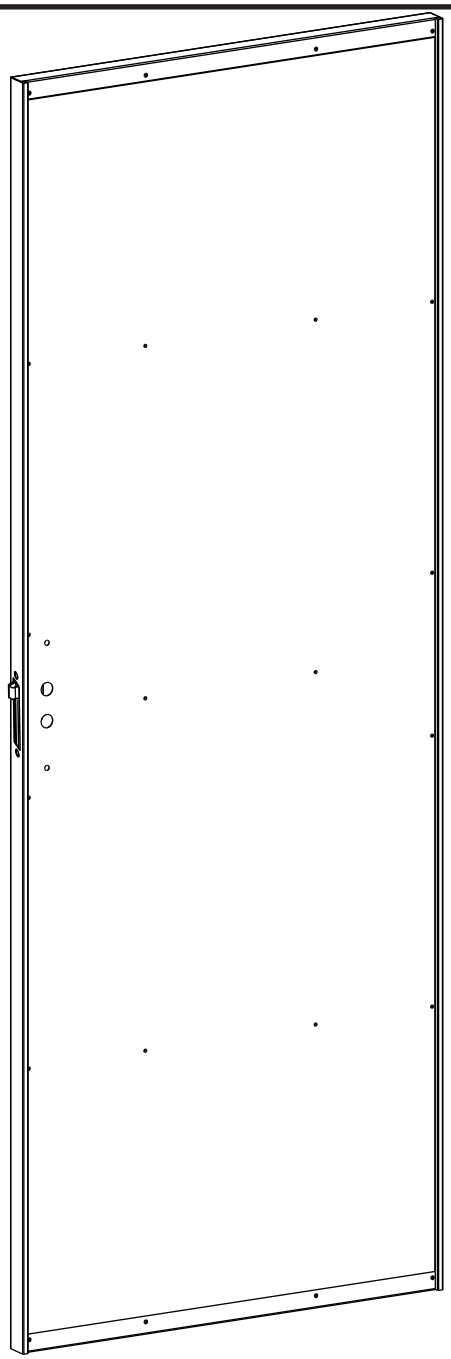

Step 21A

Use hardware supplied with handle assembly box (6PP30002) for this page

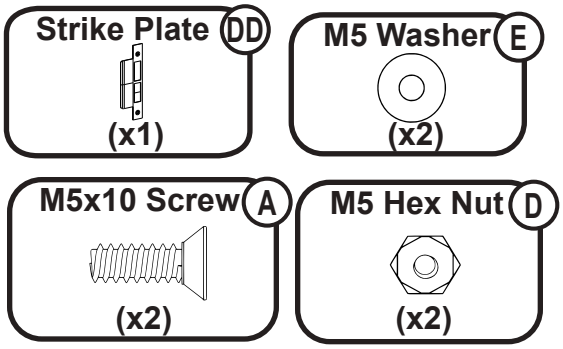

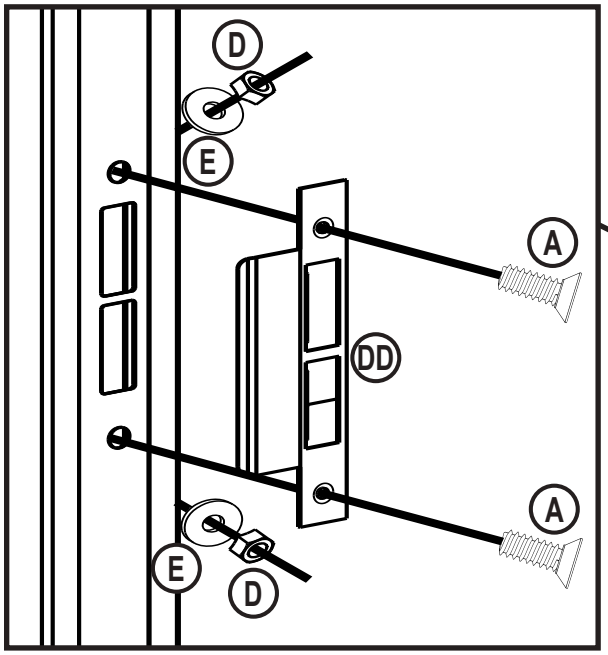

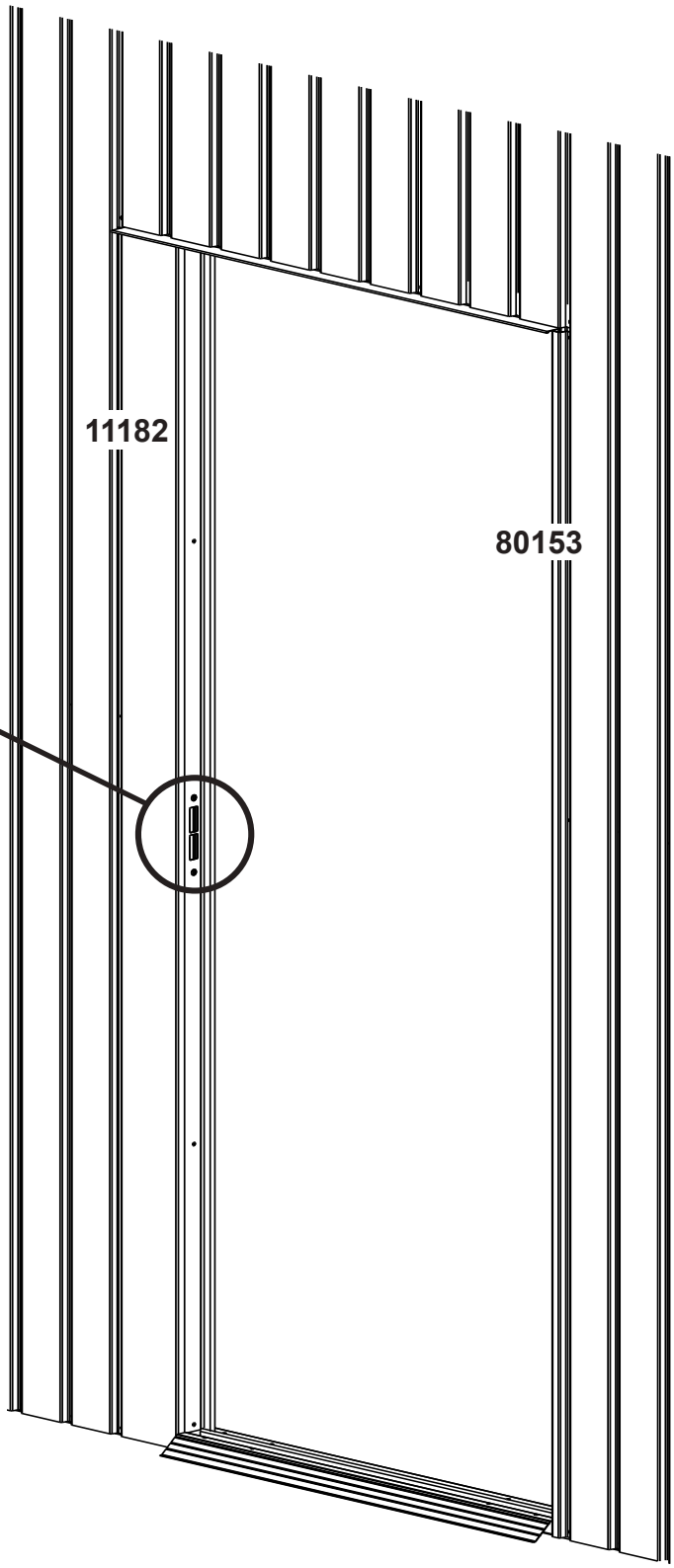

Step 21B

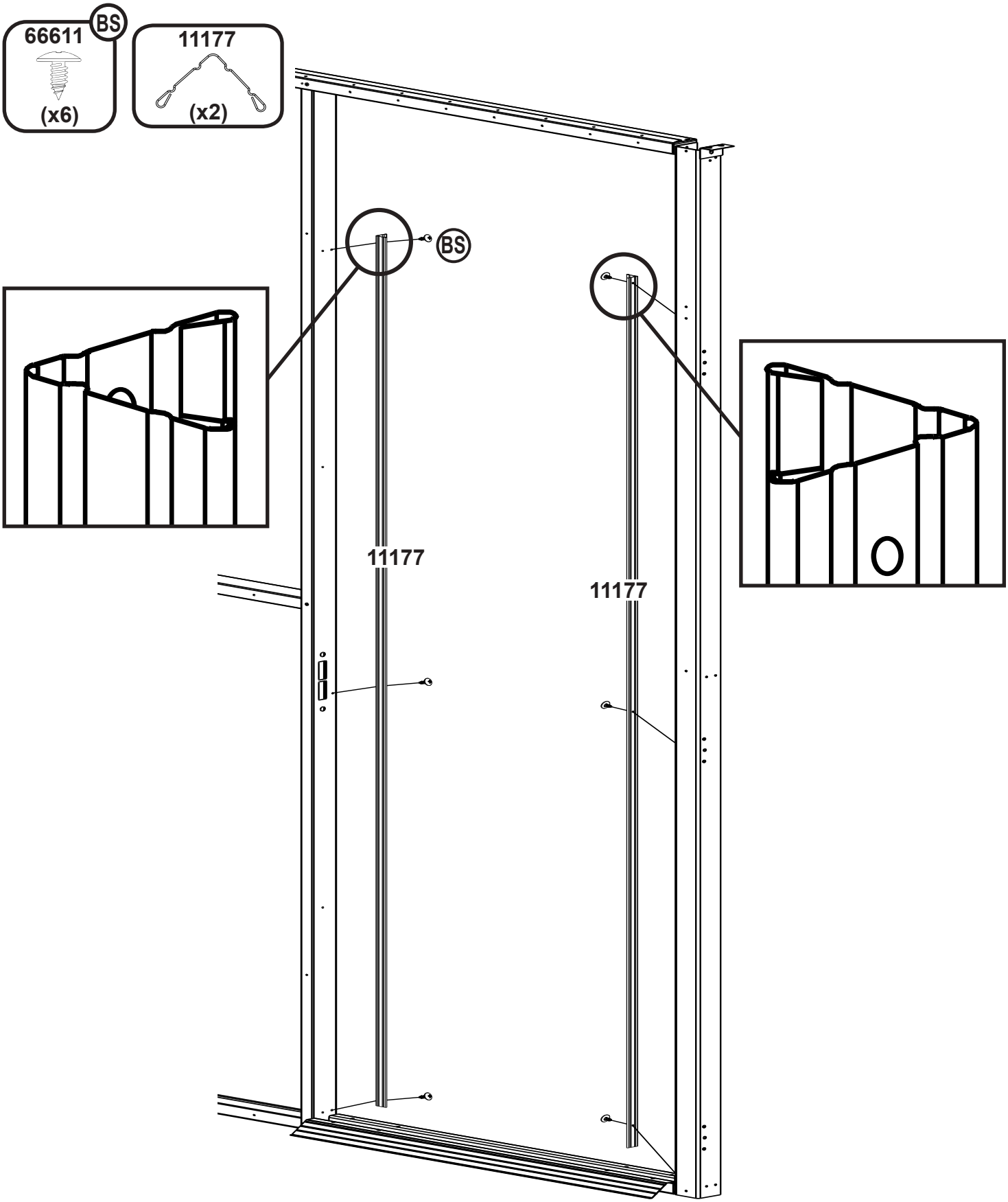

Step 21C

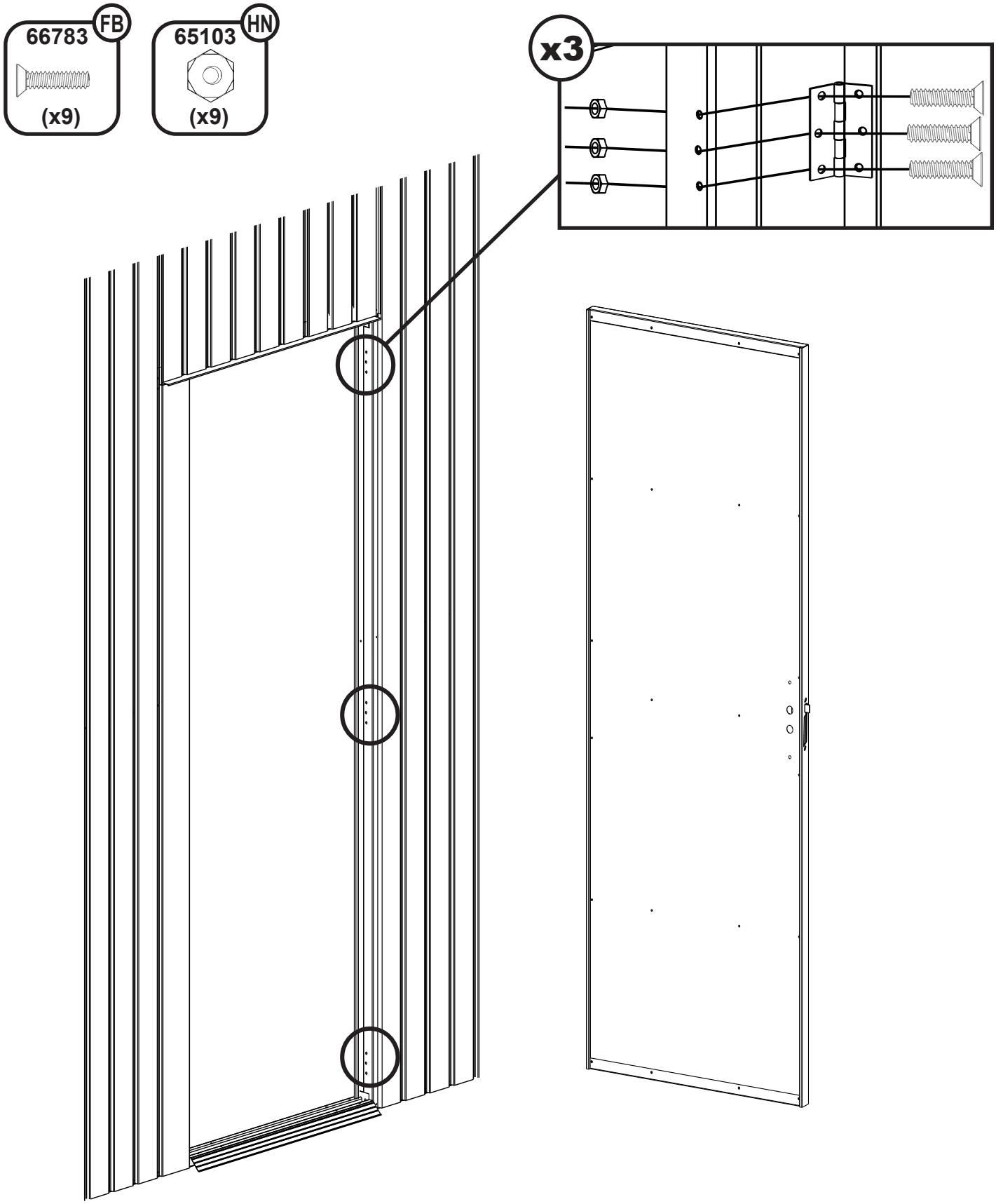

Step 22A

Use hardware supplied with handle assembly box (6PP30002) for this page

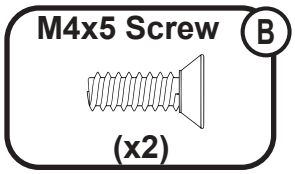

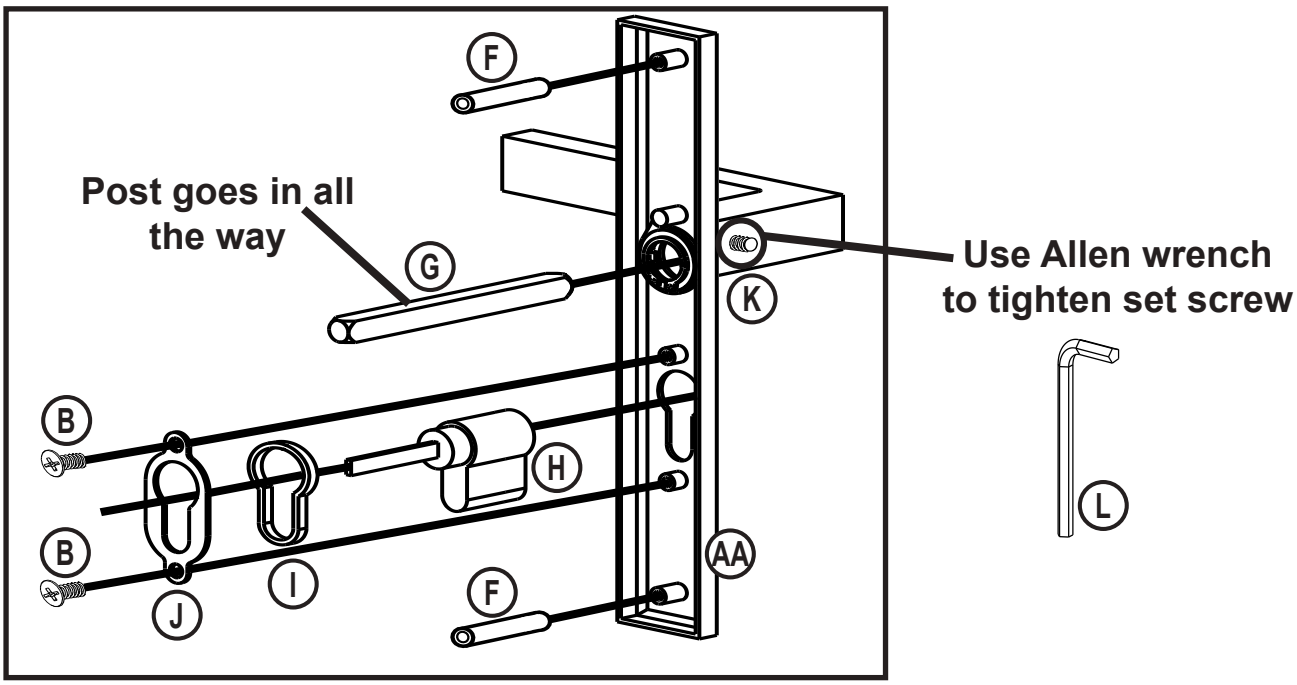

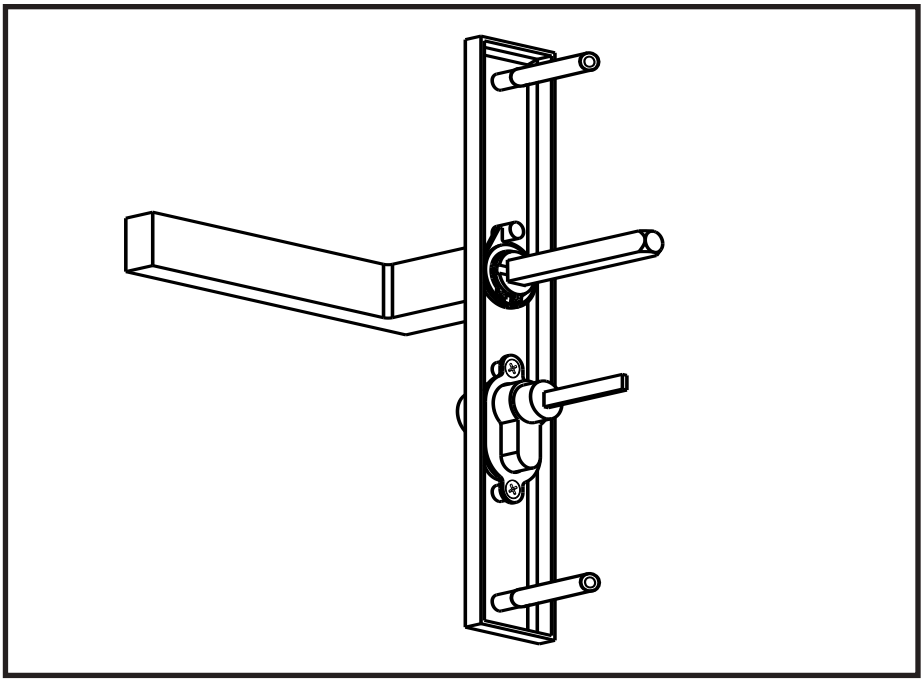

DO NOT lose keys. Replacement keys are not available

Step 22B

Use hardware supplied with handle assembly box (6PP30002) for this page

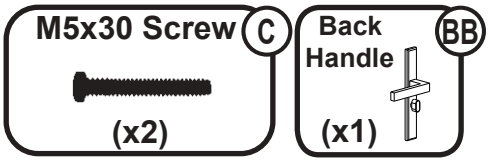

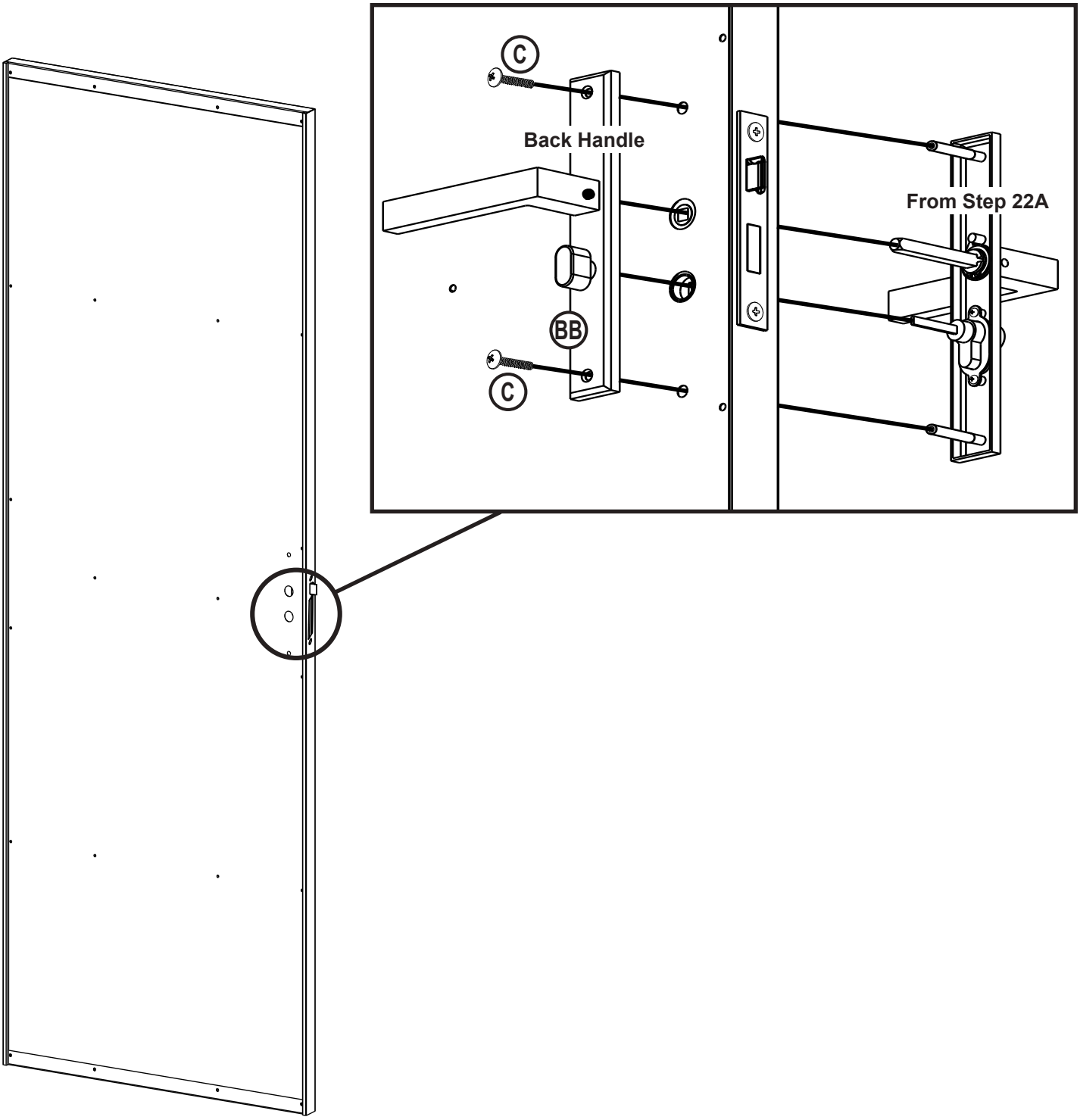

Step 23A: Bottom Panel

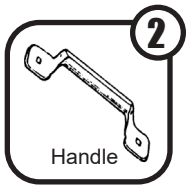

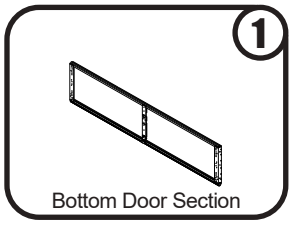

Bottom Gripping Point/Step Plate Kit

Look for the section with weather seal attached to it. This is the bottom section. Set it on table face down (the face is the outside of the door).

1 Use screws to attach the Inside Step Plate and handle to the Bottom Section

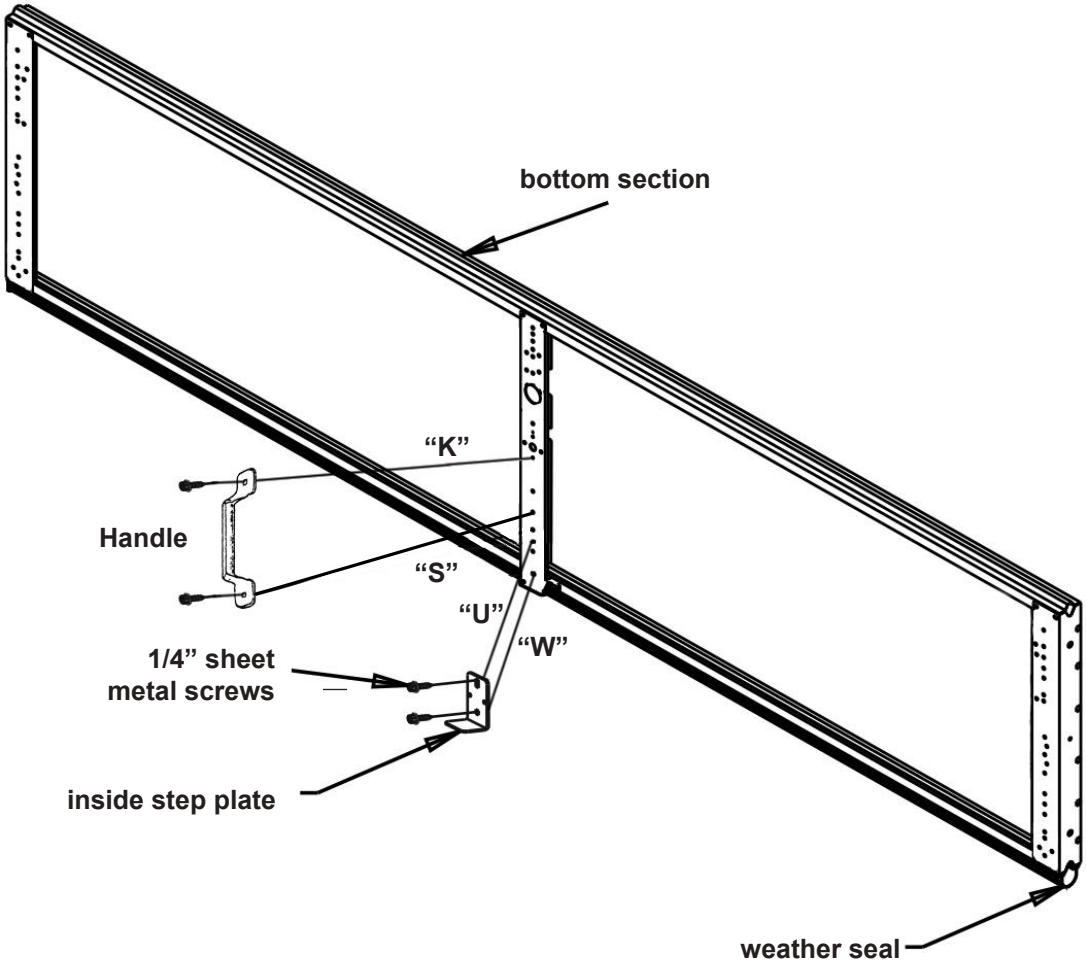

Step 23B: Bottom Panel

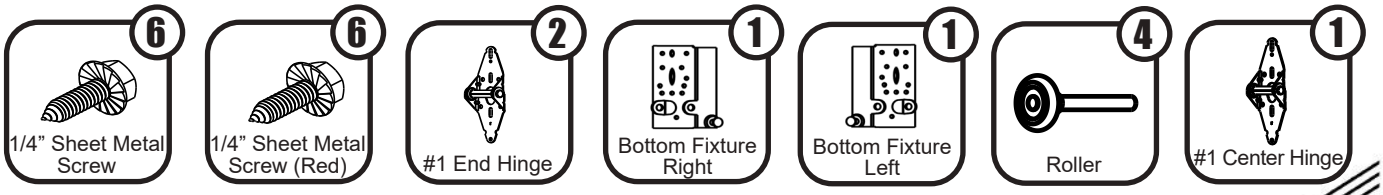

2 Sections are attached to each other with hinges. Fasten hinges marked #1 to top of bottom section at each stile using (2) 1/4" sheet metal screws per hinge. Make sure that the two slots are at top of hinge. This allows for adjustment when you stack sections. Attach each bottom fixture with (3) red 1/4" sheet metal screws.

3 The door is held in the track with rollers. Insert rollers into bottom fixtures and end hinges.

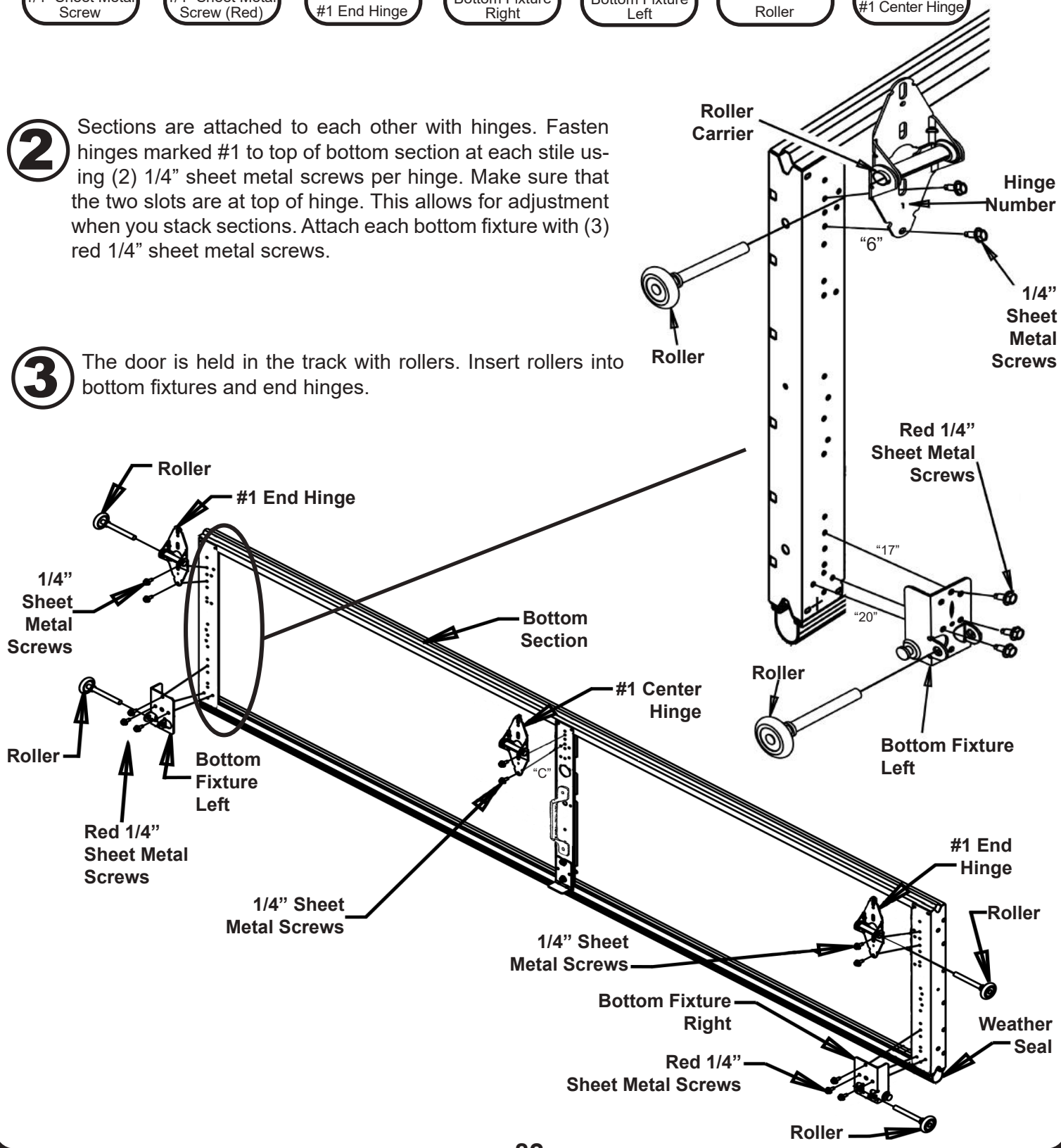

Step 24A: #2 Panel

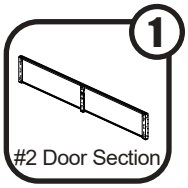

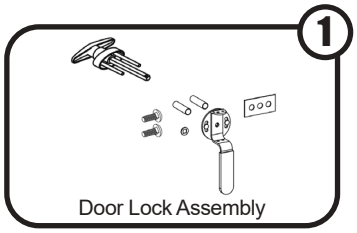

1. Drill one 1/2” center hole and two 3/8” side holes through the #2 section, as shown below. Drill completely through the section.

2. Install lock assembly in section.

#2 Section

lock/outside handle

guide plate

10-24 x 1 1/8” Flat Head Screw

Red Plastic Spacers

spring clip

1/2” drill

inside handle

Step 24B: #2 Panel

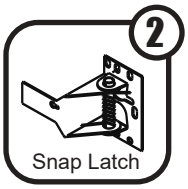

3 Attach a snap latch assembly to each end stile using two 1/4” sheet metal screws.

#2 Section

1/4” Sheet Metal Screw

“11”

“15”

snap latch

1/4” Sheet Metal Screw

Step 24C: #2 Panel

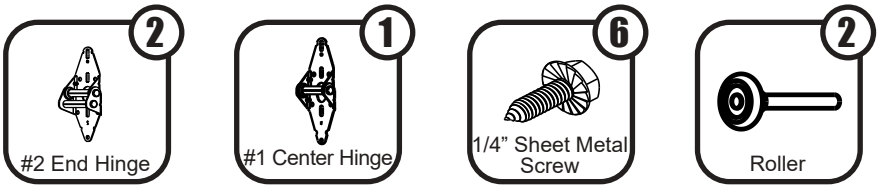

4 Fasten end hinges marked #2 to top of section on each end stile. Use (2) 1/4" sheet metal screws per hinge. Make sure that the two slots are at top of hinge. Insert a roller into each end hinge as shown. Attach #1 center hinge.

Roller Carrier
1/4" Sheet Metal Screws
"6"
Hinge Number
Roller
Roller
#2 End Hinge
#2 Section
#1 Center Hinge
1/4" Sheet Metal Screws
"C"
#2 End Hinge
1/4" Sheet Metal Screws
Roller
1/4" Sheet Metal Screws

Step 25: #3 Panel

1 Fasten end hinges marked #3 to top of section on each end stile. Use (2) 1/4" sheet metal screws per hinge. Make sure that the two slots are at top of hinge. Insert a roller into each end hinge as shown. Attach #1 center hinge.

Roller Carrier
1/4" Sheet Metal Screws
"6"
Hinge Number
Roller
Roller
#3 End Hinge
#3 Section
#1 Center Hinge
1/4" Sheet Metal Screws
"C"
1/4" Sheet Metal Screws
#3 End Hinge
Roller
1/4" Sheet Metal Screws

Step 26a: Track Installation

You will need for this page:

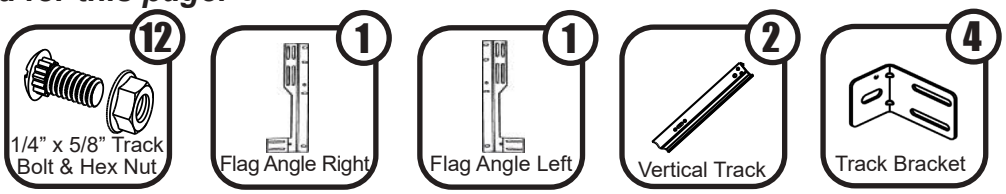

Prepare the Vertical Tracks.

1 The top of the vertical track must pitch back from the jamb for door to seal properly. This spacing is set by use of 2 slot universal track brackets. Attach but **do not fully tighten** brackets to track with 1/4" x 5/8" track bolts and nuts. The detail is shown with two different track brackets.

Always place heads of bolts to inside of the track. This will prevent rollers from striking bolts.

2 The flag angle mounts to the top of the track with (2) 1/4" x 5/8" track bolts and nuts. This bracket joins the vertical and horizontal tracks as well as the angle attached to the horizontal track. Leave bolts loose at this time. You will adjust the track after it is installed to the jambs.

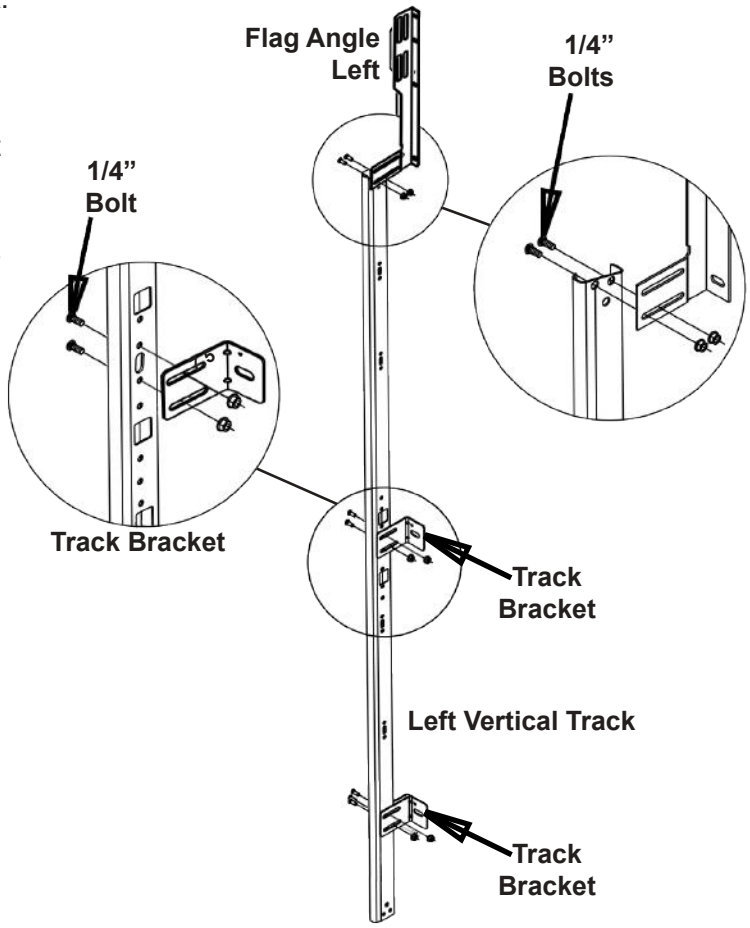

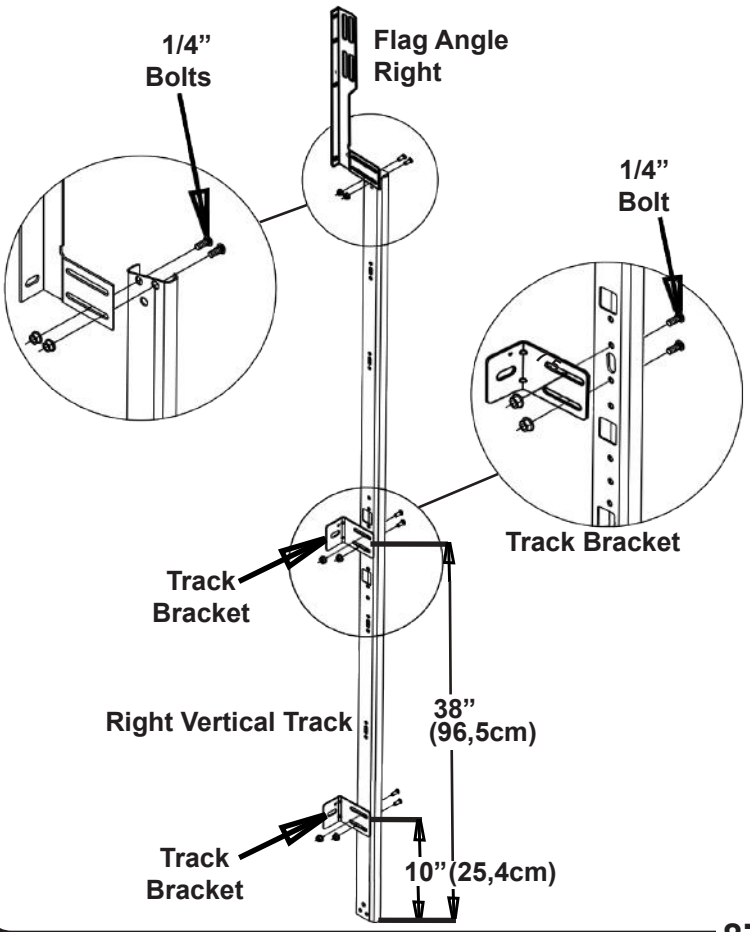

Step 26B: Track Installation

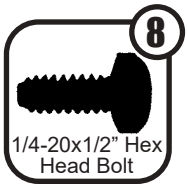

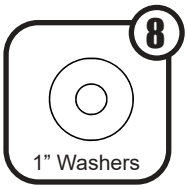

3 Fasten the vertical track and flag angle assembly to the door jamb using 1/4" Bolt and Hex Nut with 1" Washer. Follow the orientation as shown below. Do this for both the right and left vertical tracks.

Flag Angle Right

Flag Angle Left

1/4-20 Square Nut

1" Washer

1/4-20x1/2" Hex Head Bolt

Step 27A: Insert Panels

Assemblies from Step 23:

- **Bottom Panel Subassembly**

1. Insert the bottom section into the doorway. Slide the rollers into the vertical track as shown.

2. Center and level bottom section in opening. If there is a gap on one end at the floor then the track will not rest on the floor by the same amount. Check this when vertical tracks are in place.

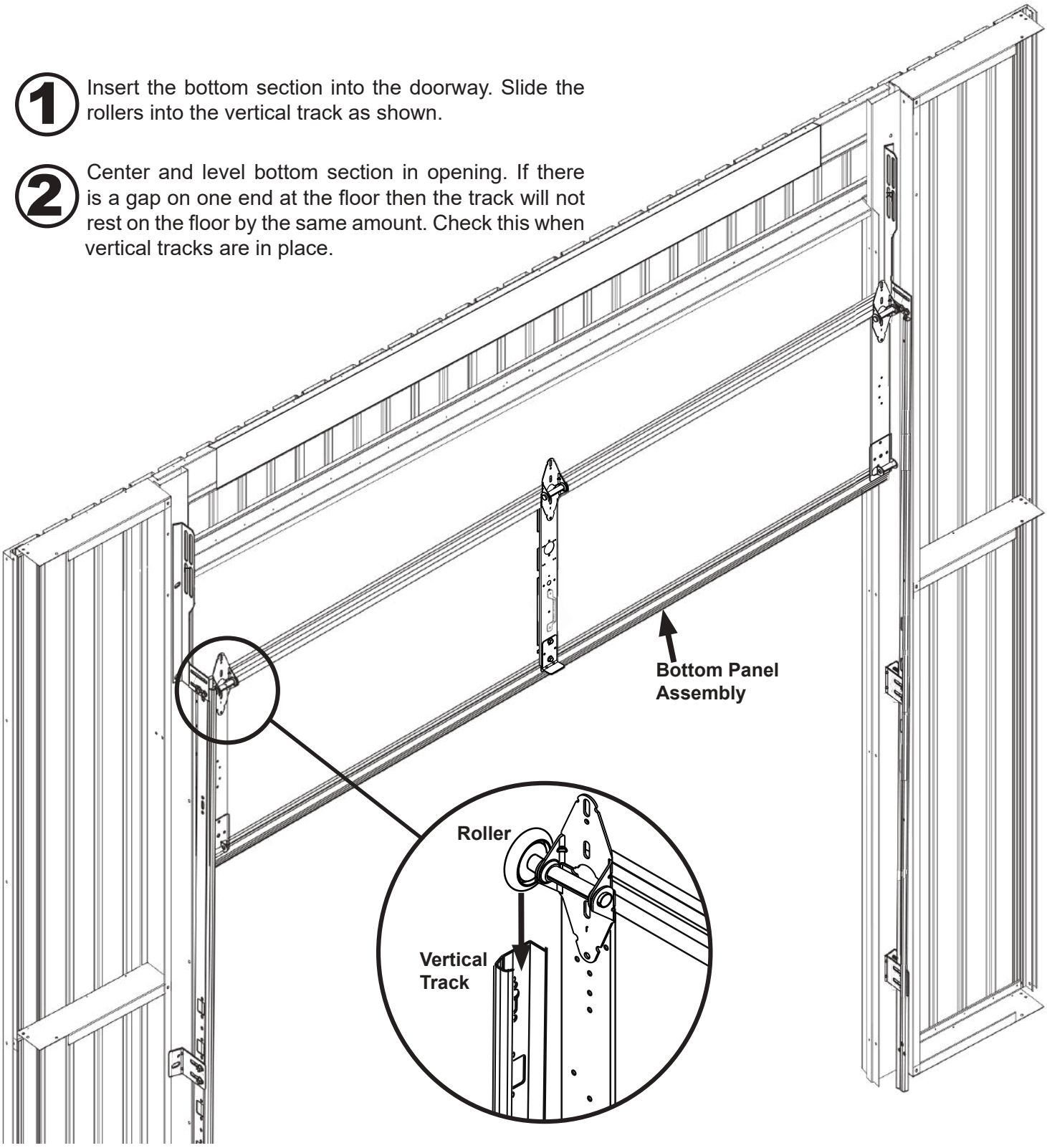

Step 27B: Insert Panels

Assemblies from Step 24:
- **#2 Panel Subassembly**

3 Stack #2 section (with #2 end hinges) on top of bottom (#1) section while sliding rollers into vertical track.

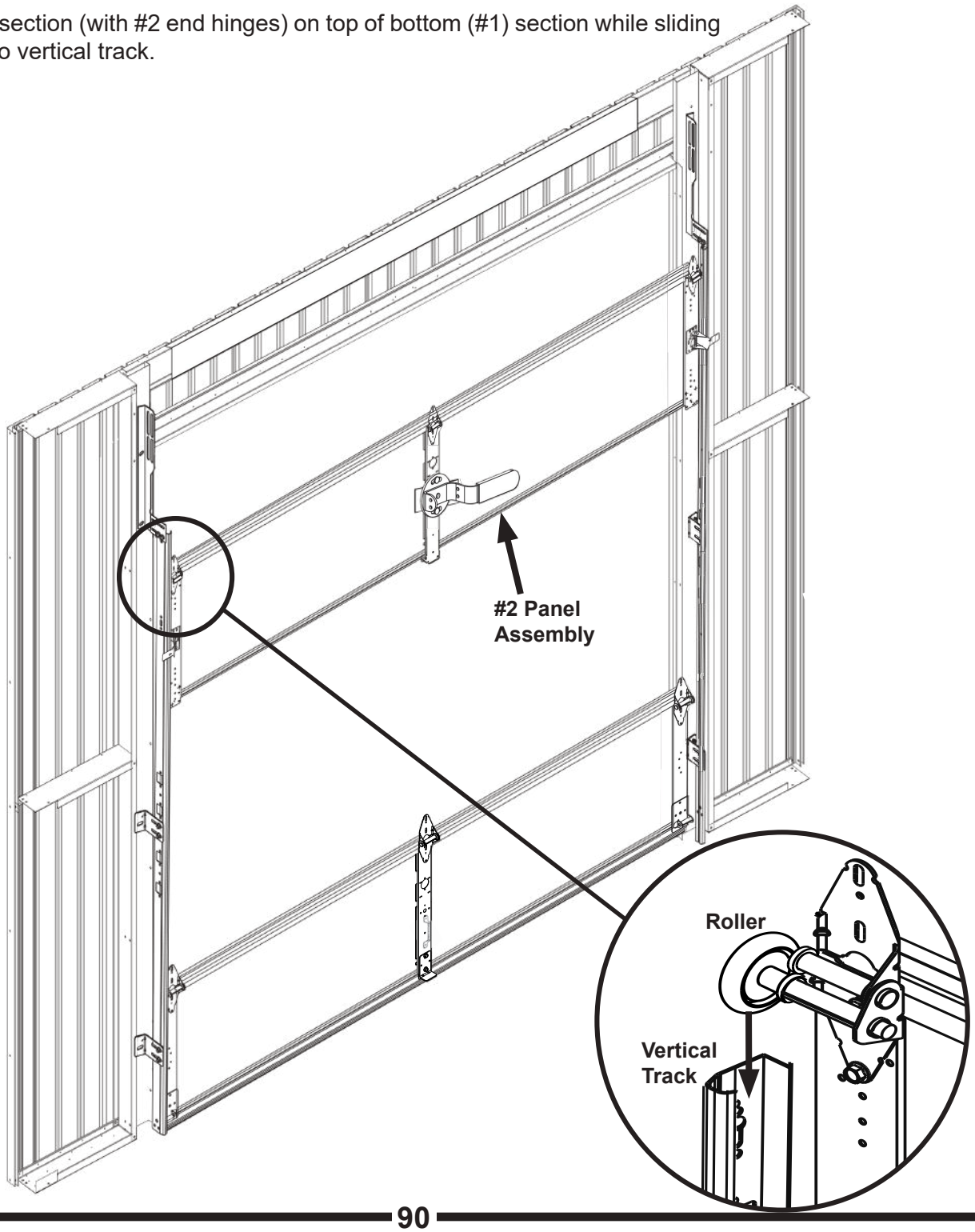

Step 27C: Insert Panels

4 Attach the #1 end hinges and center hinge to the #2 section with 1/4” sheet metal screws.

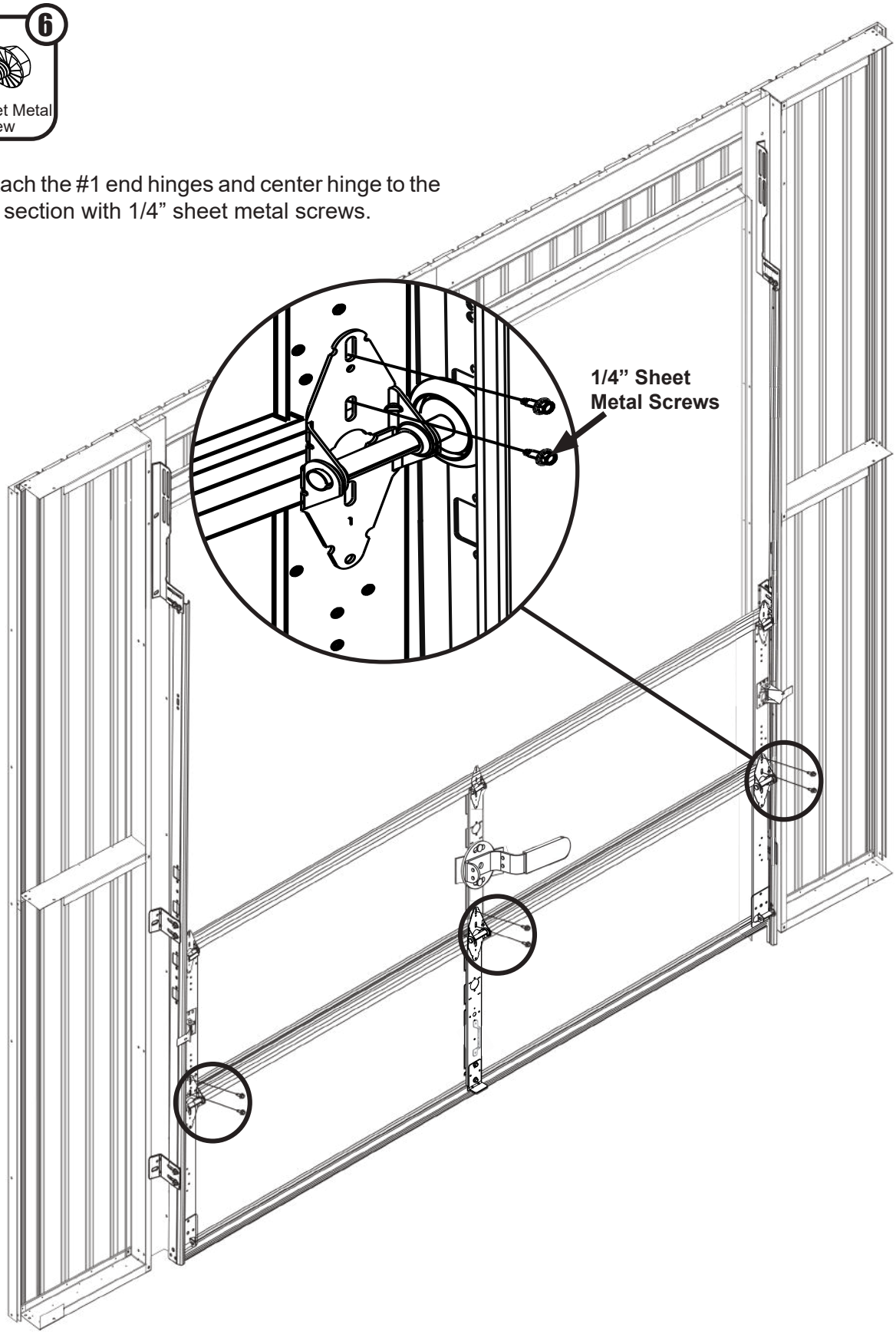

Step 27D: Insert Panels

Assemblies from Step 25:
- **#3 Panel Subassembly**

5 Stack #3 section (with #3 end hinges) on top of #2 section while sliding rollers into vertical track.

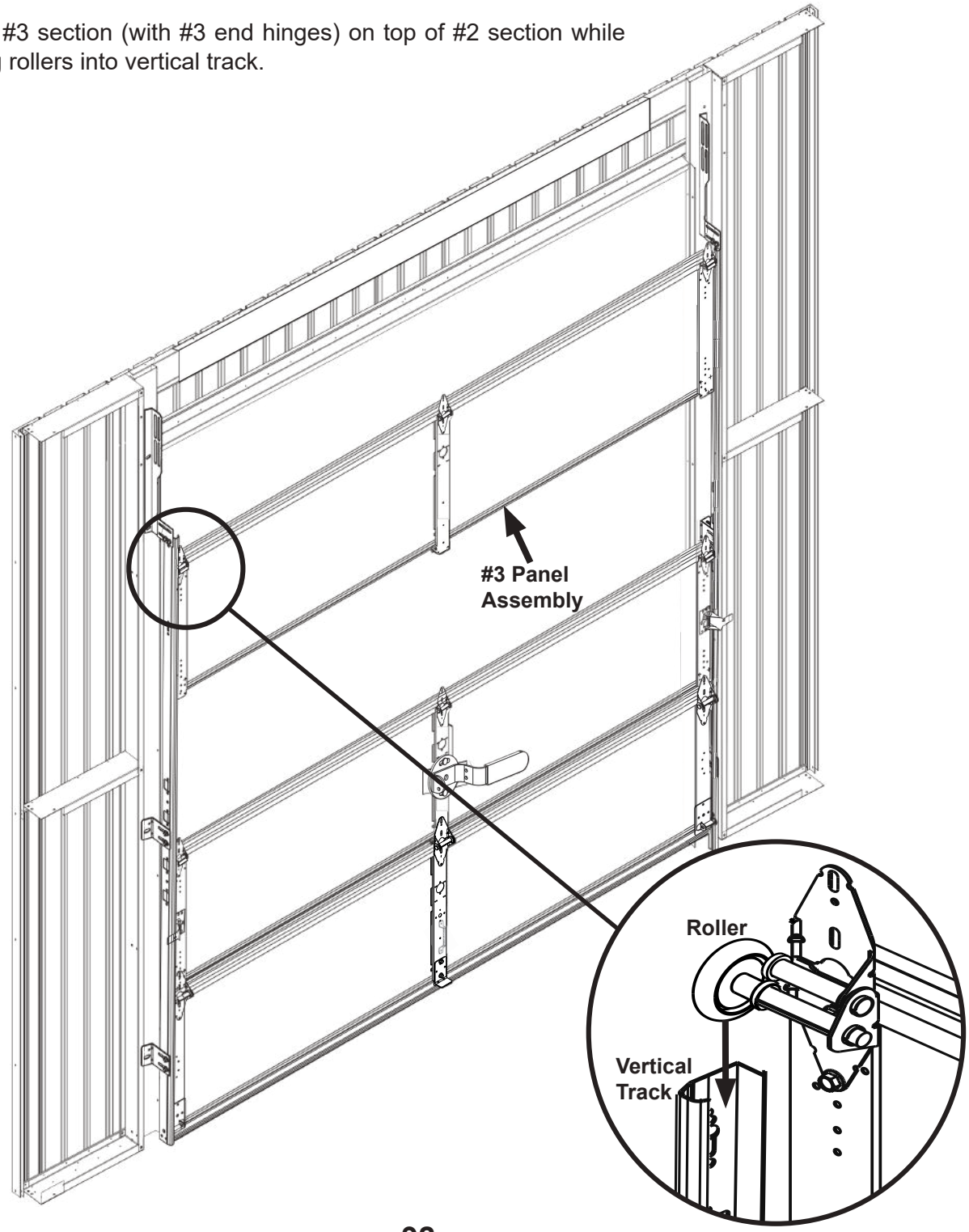

Step 27E: Insert Panels

6 Attach the #2 end hinges and center hinge to the #3 section with 1/4” sheet metal screws.

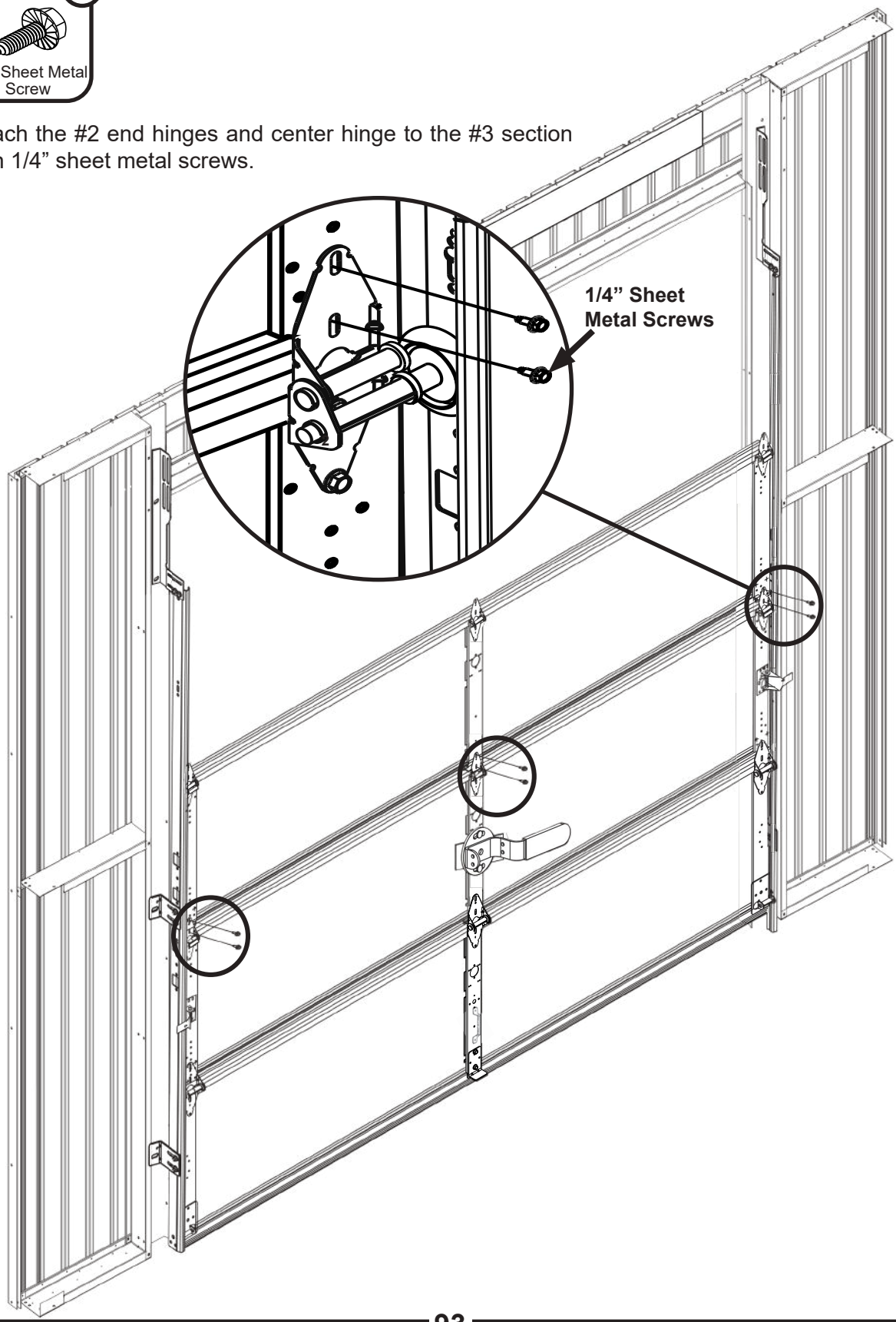

Step 28: Snap Latch Keeper

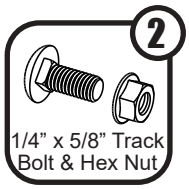

1 Attach a snap latch keeper to each vertical track using a bolt and nut.

left side

#2 Panel Assembly

snap latch keeper

1/4" x 5/8" track bolt

1/4" hex nut

right side

1/4" x 5/8" track bolt

snap latch keeper

#2 Panel Assembly

1/4" hex nut

Step 29: Thread Cable

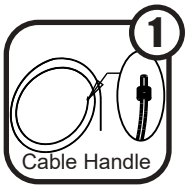

1 Insert cable through left snap latch hole. Place a lug on the end of the cable to prevent it from sliding out.

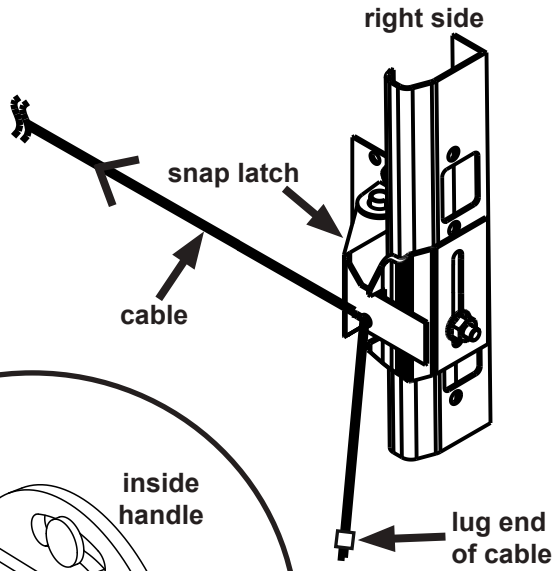

2 Feed the cable through the inside handle.

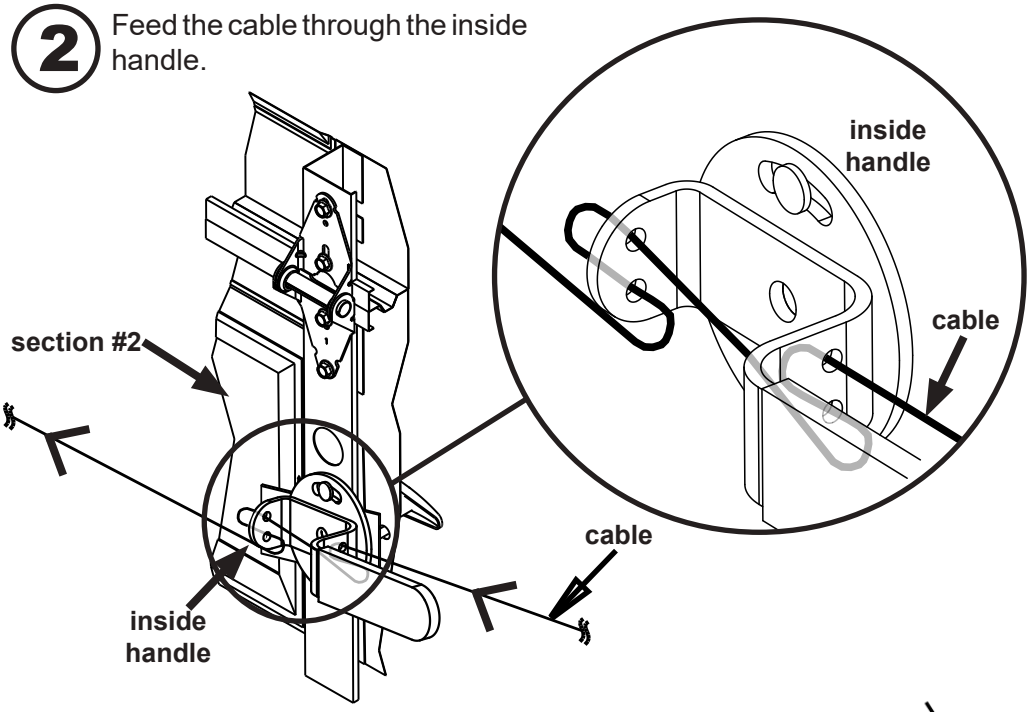

3 Thread cable through the snap latch. Insert track bolt into the snap latch. Tighten with 1/4" hex nut.

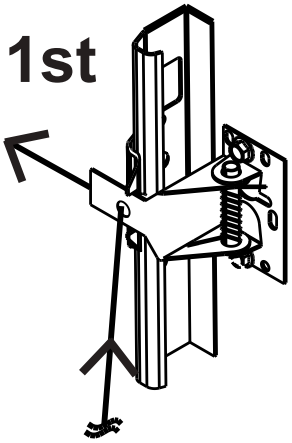

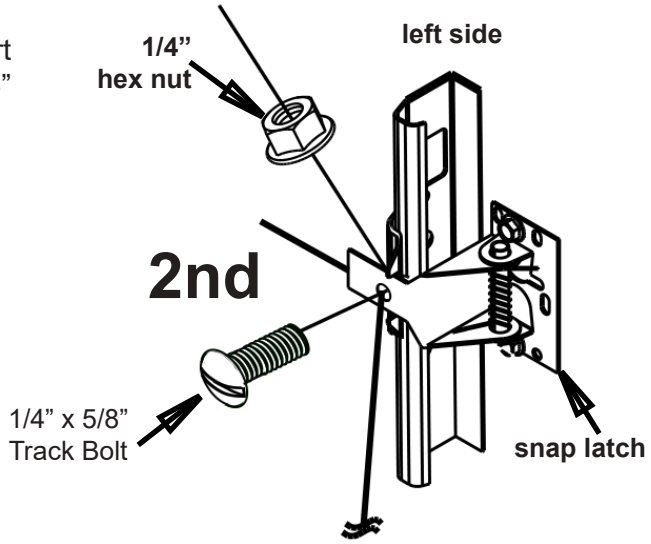

Step 30A: Horizontal Track

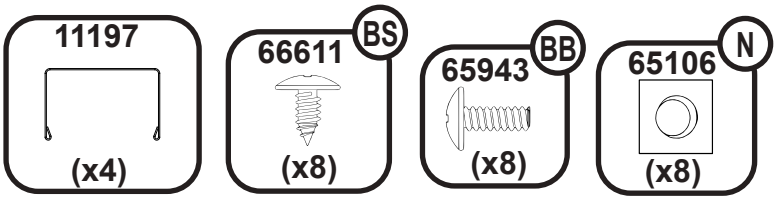

1 Assemble door track supports using screws.

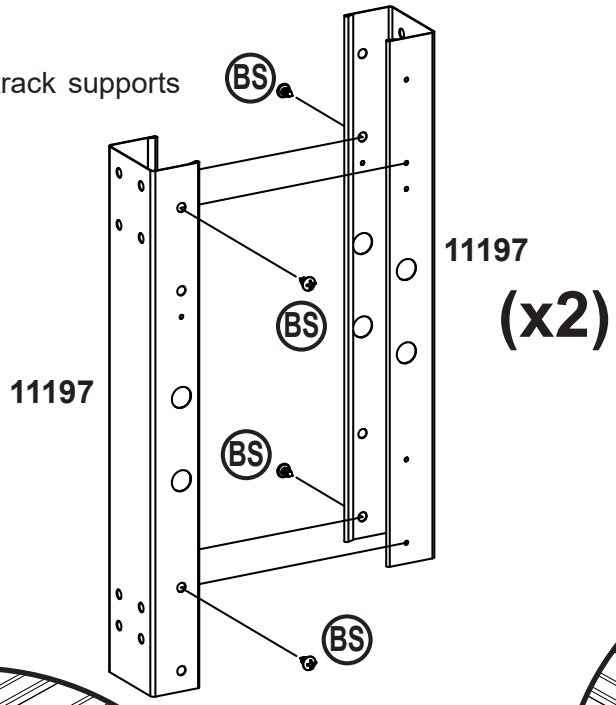

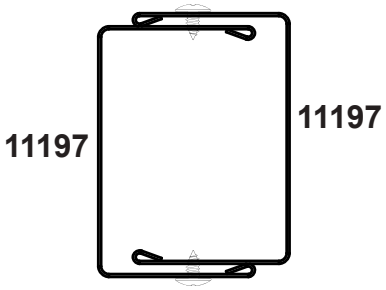

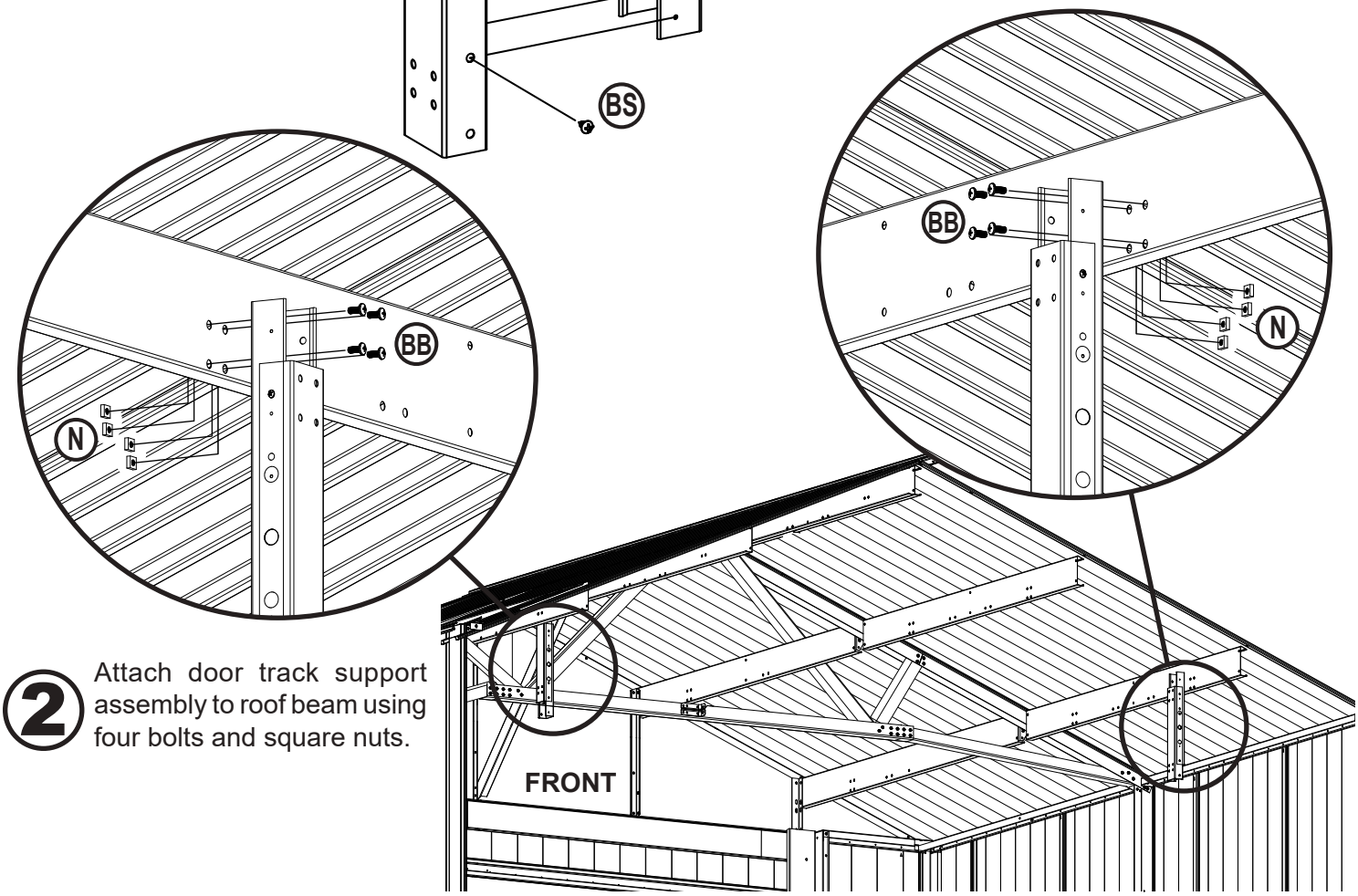

2 Attach door track support assembly to roof beam using four bolts and square nuts.

Step 30B: Horizontal Track

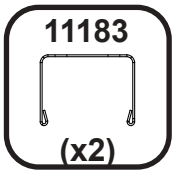

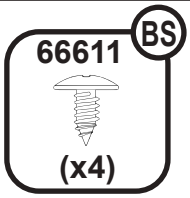

3 Attach track strut to rear frame using one screw.

12x10

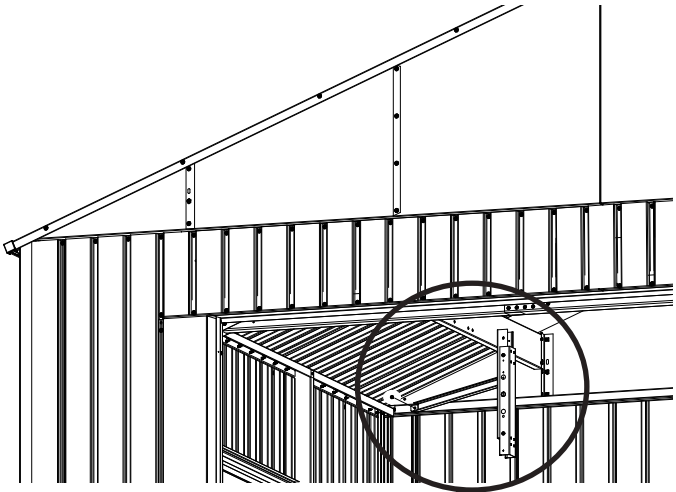

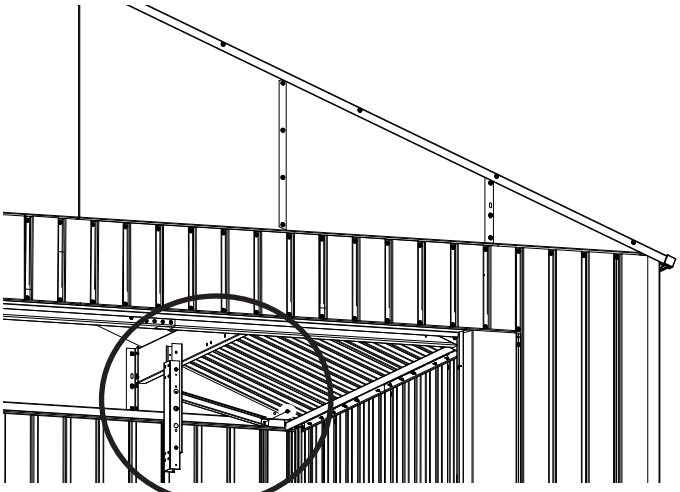

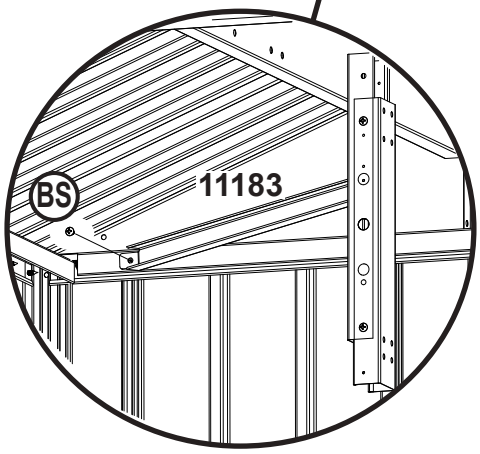

VIEW FACING REAR

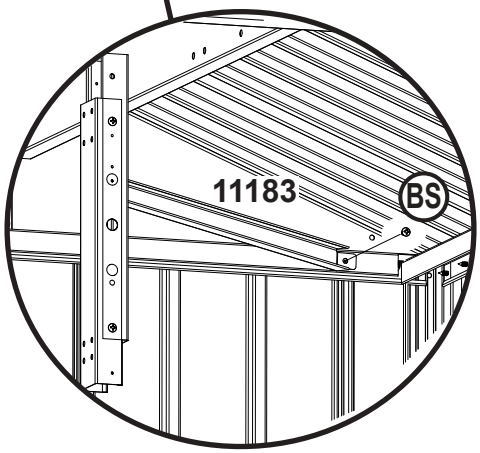

4 Attach track strut to door track support assembly using one screw.

VIEW FACING FRONT

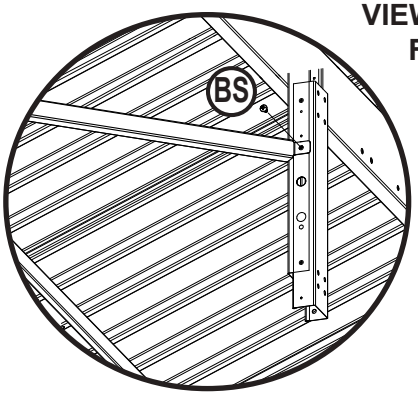

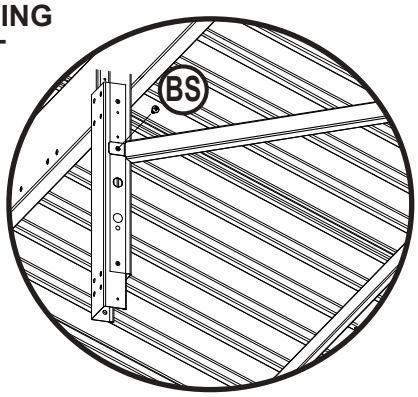

Step 30C: Horizontal Track

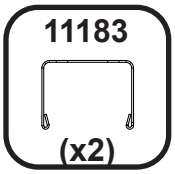

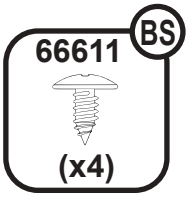

5 Attach track strut to door track support assembly using one screw.

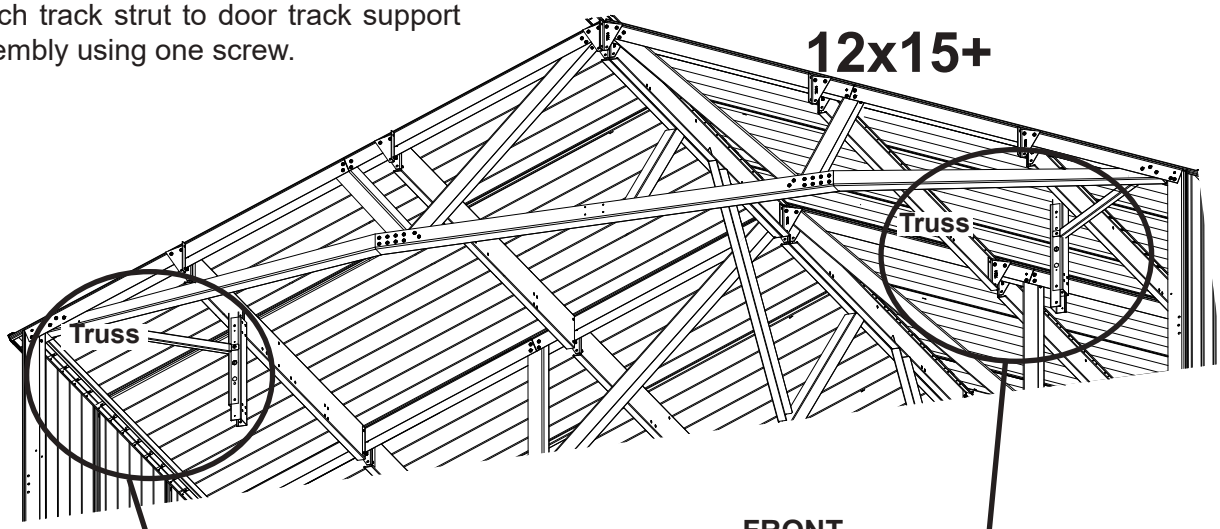

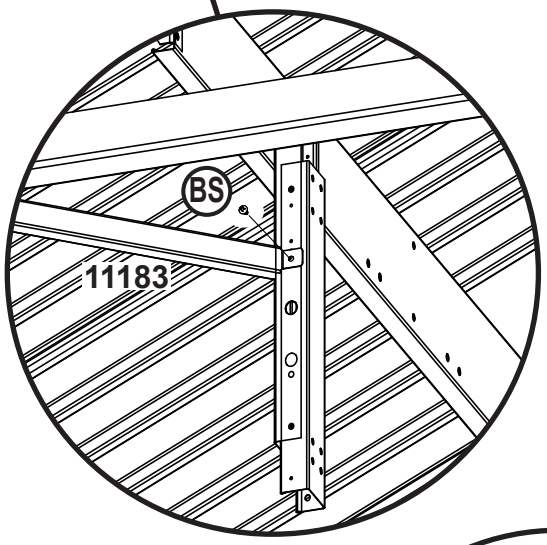

FRONT

VIEW FACING FRONT

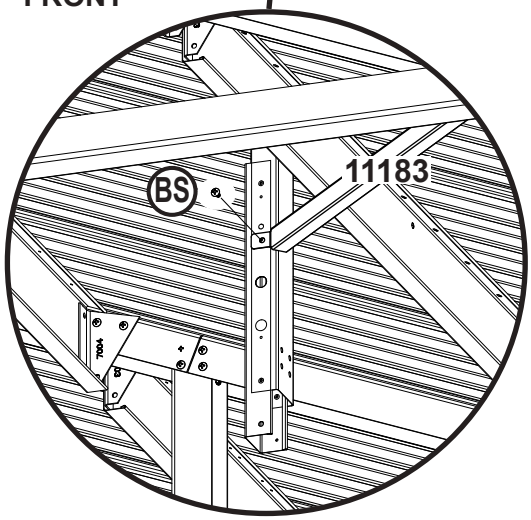

6 Attach track strut to truss using one screw.

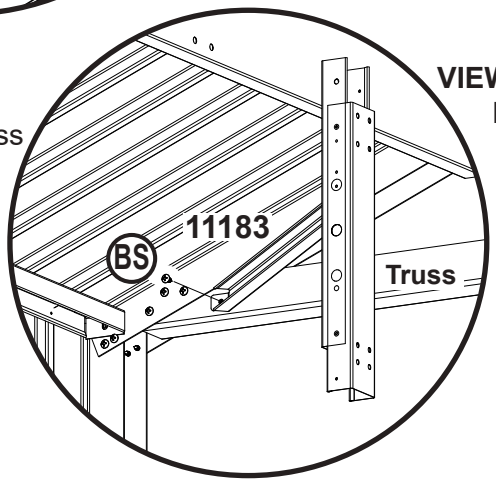

VIEW FACING REAR

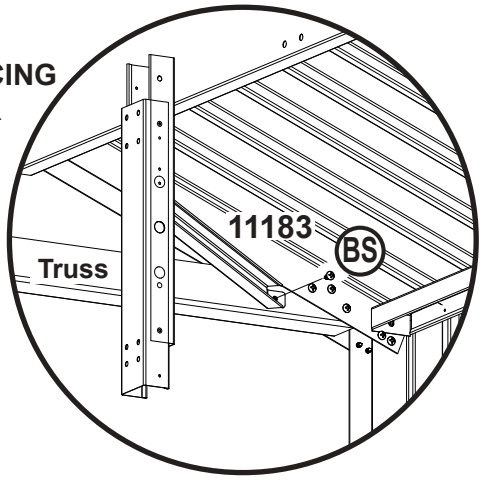

Step 30D: Horizontal Track

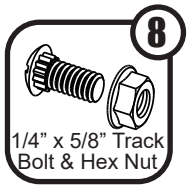

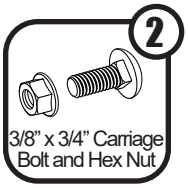

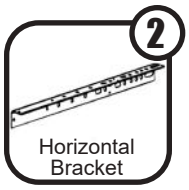

7 Have another person hold the end of the right horizontal curve track. Fasten the front of the track to flag angle with (2) 1/4" x 5/8" track bolts and nuts. Always place heads of bolts to inside of the track. This will prevent rollers from striking bolts.

8 Fasten angle (attached to horizontal curve track) to flag angle with 3/8" x 3/4" carriage bolt and nut. Always place heads of bolts on same side as the door sections. This will prevent door from striking bolts.

9 Repeat for left horizontal curve track.

Right Flag Angle
3/8" x 3/4" Carriage Bolt
3/8" Nut
Hex Nut
3/8" x 3/4" Carriage Bolts
Right Horizontal Curve Track
1/4" Nut
1/4" x 5/8" Track Bolts
HOLD UP END OF TRACK OR USE ROPE PROVIDED
Hex Nut
Vertical Track
1/4" x 5/8" Track Bolts
1/4" x 5/8" Track Bolts
Hex Nut

Step 30E: Horizontal Track

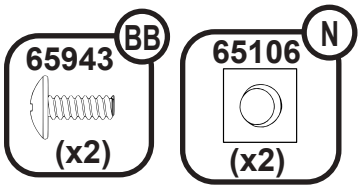

10 Attach the end of the Right Horizontal Curve Track to the Door Track Support Assembly using bolts and nuts as shown.

11 Repeat for Left Horizontal Track.

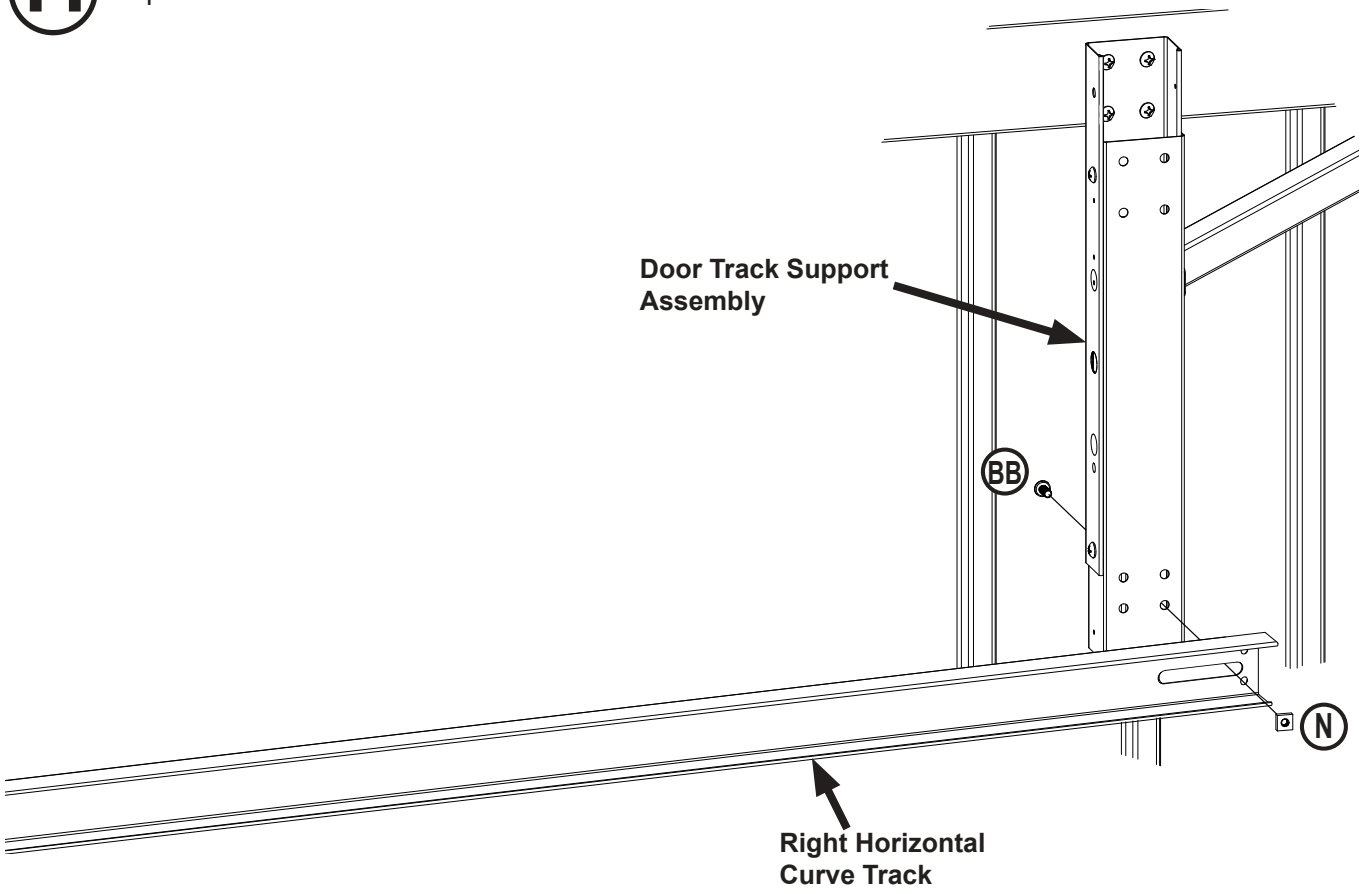

Step 31A: Insert Top Panel

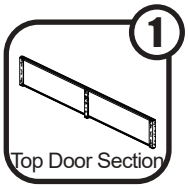

Assembling the top door panel will require another person holding the door section while attaching the fixtures and hinges. Make sure adequate help is available before continuing on with the installation.

1 Have someone stack the top section on top of the other door sections and hold it there.

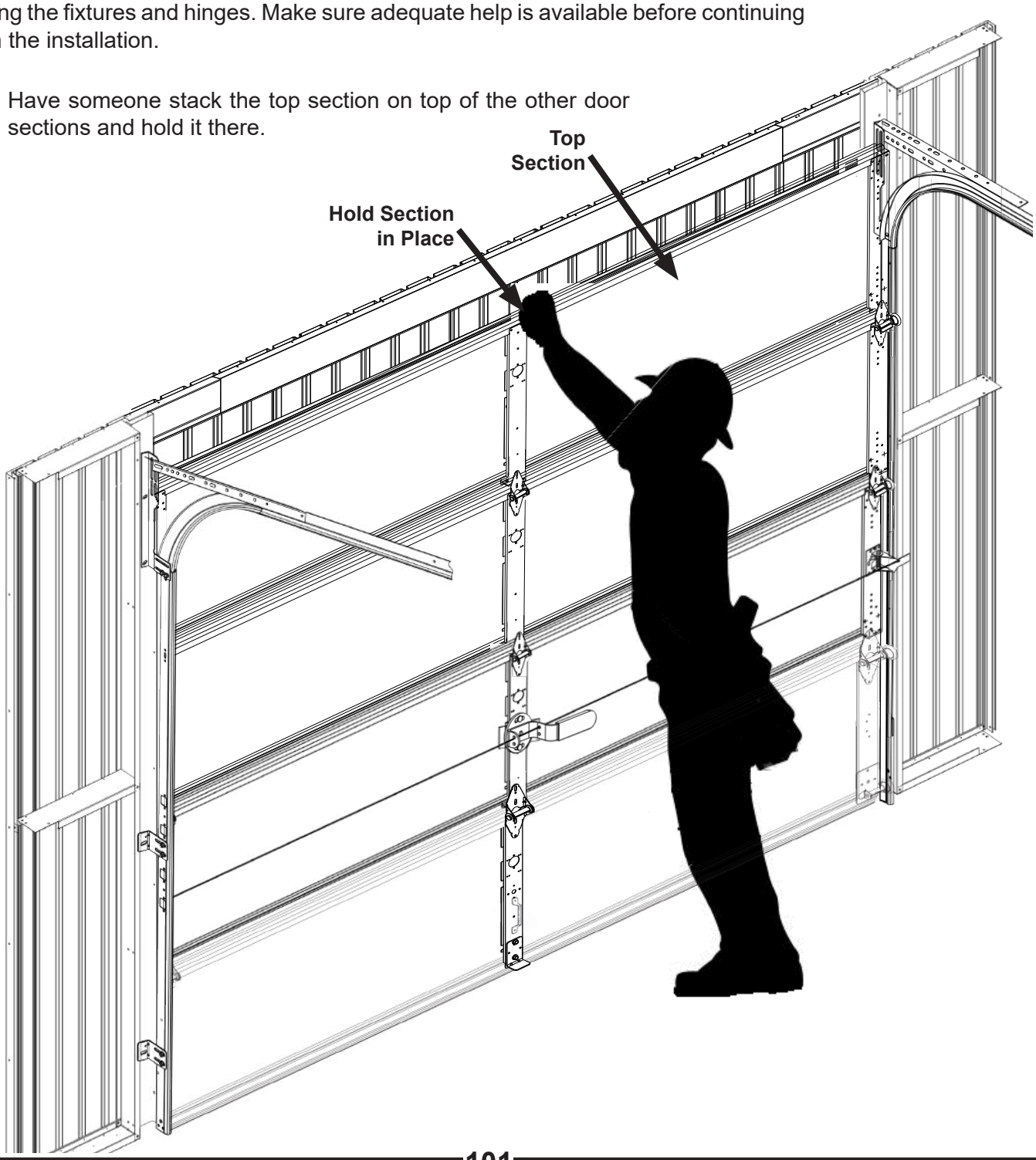

Step 31B: Insert Top Panel

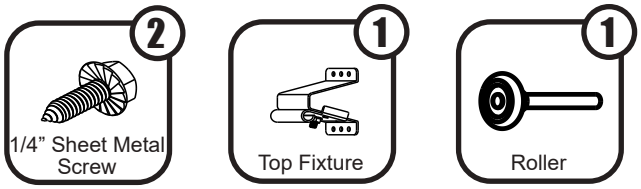

2 Place a roller inside of a top fixture.

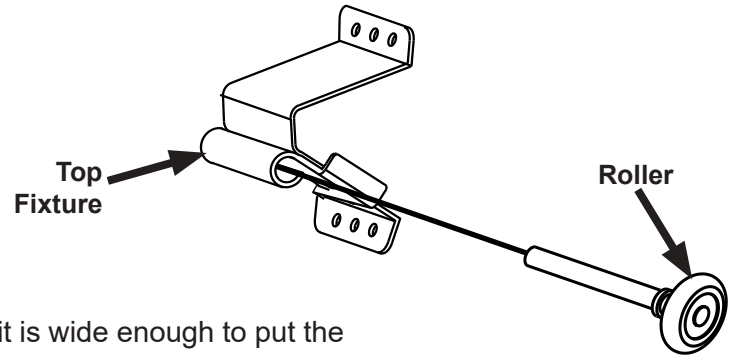

3 Slide the roller into the horizontal track where it is wide enough to put the roller as shown. You may have to angle it in.

4 Slide the roller through the track so it lines up with the top track. Attach the top fixture to the top section using 1/4” sheet metal screws.

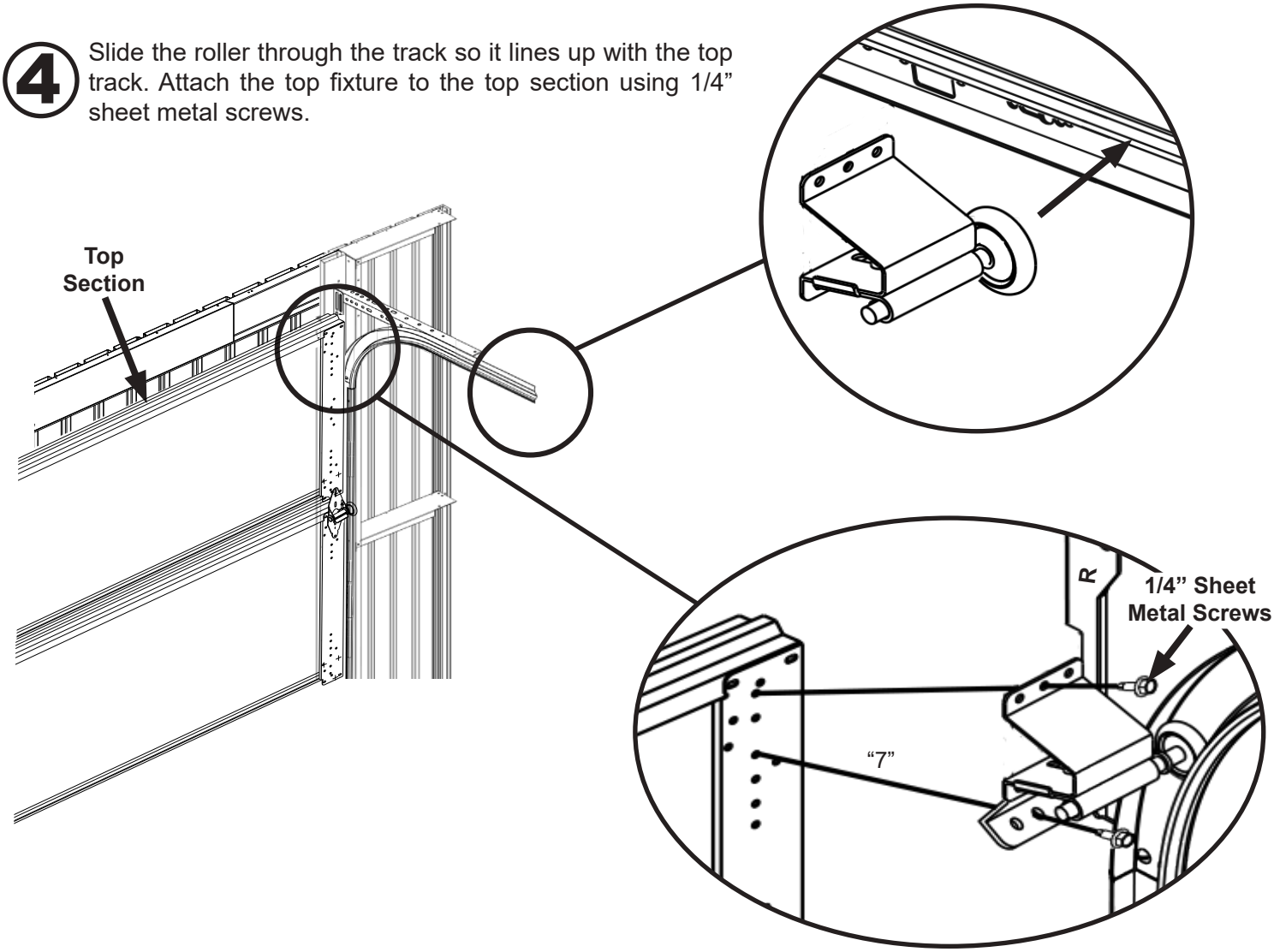

Step 31C: Insert Top Panel

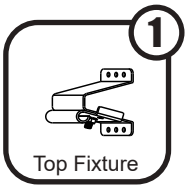

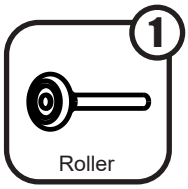

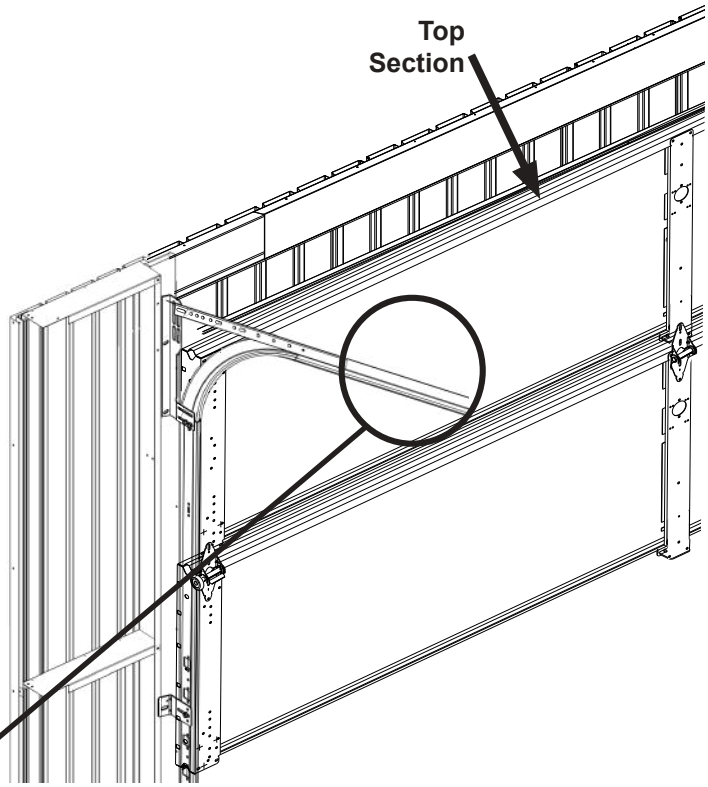

5 Place another roller into the other top fixture.

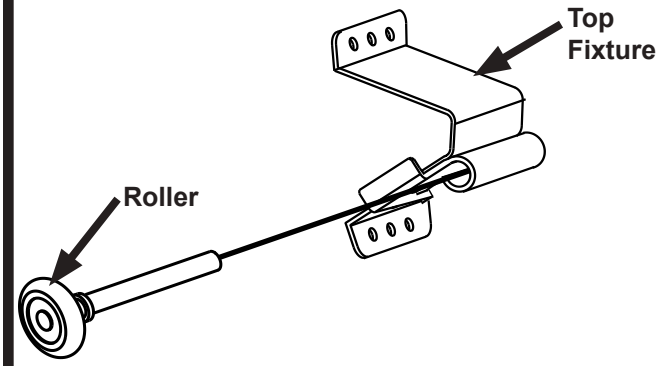

6 Slide the roller into the horizontal track where it is wide enough to put the roller as shown. You may have to angle it in.

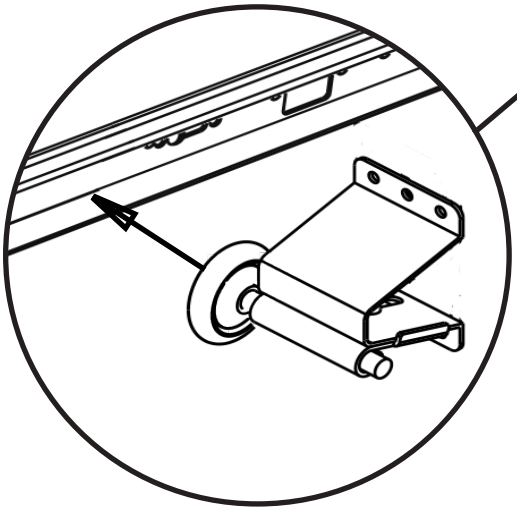

7 Slide the roller through the track so it lines up with the top track. Attach the top fixture to the top section using 1/4” sheet metal screws.

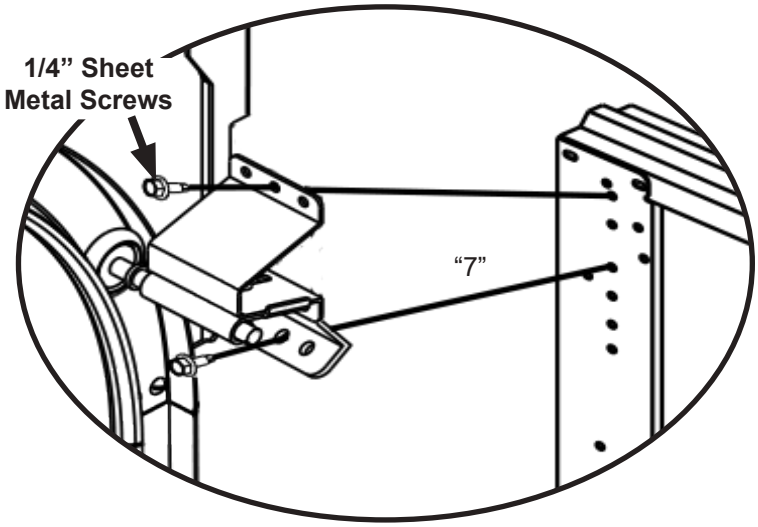

Step 31D: Insert Top Panel

8 Attach the #3 end hinges and center hinge to the top section with 1/4" sheet metal screws.

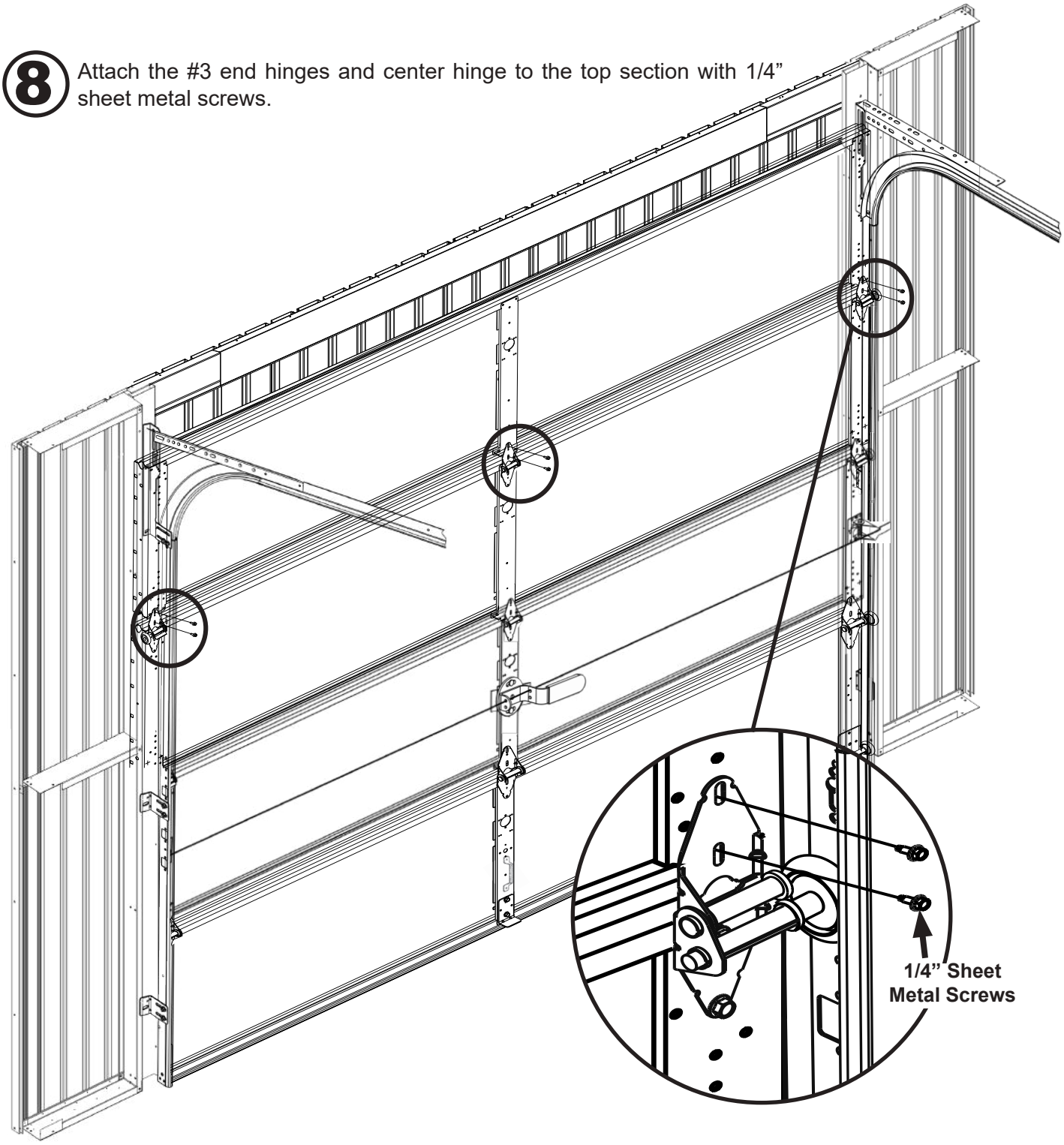

Spring Assembly Preparation

Check all spring assembly instructions and parts.
Warning! If there appears to be any parts missing stop here and contact your Arrow Customer Service immediately. Do not substitute parts.

Warning! Do not remove any factory applied spring tag or warning label! If any tags or labels are missing or unreadable, contact your Arrow Customer Service immediately.

Warning! Never place your fingers in or near section joints while the door is moving.

Take time to study the parts and identify them.
Extension Springs: Extension springs mount alongside the horizontal track. They stretch as the door is closed and contract as the door opens. This type of spring is always used in pairs, one on each side of the door. Both springs are the same, it will not matter which one you assemble first.

Safety Cable: Extension springs can cause severe damage, personal injury or even death if they are not properly restrained. In the event of a spring failure the safety cable will prevent the spring from being propelled away from the door.

Step 32A: Extension Spring Assembly

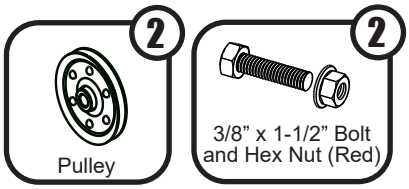

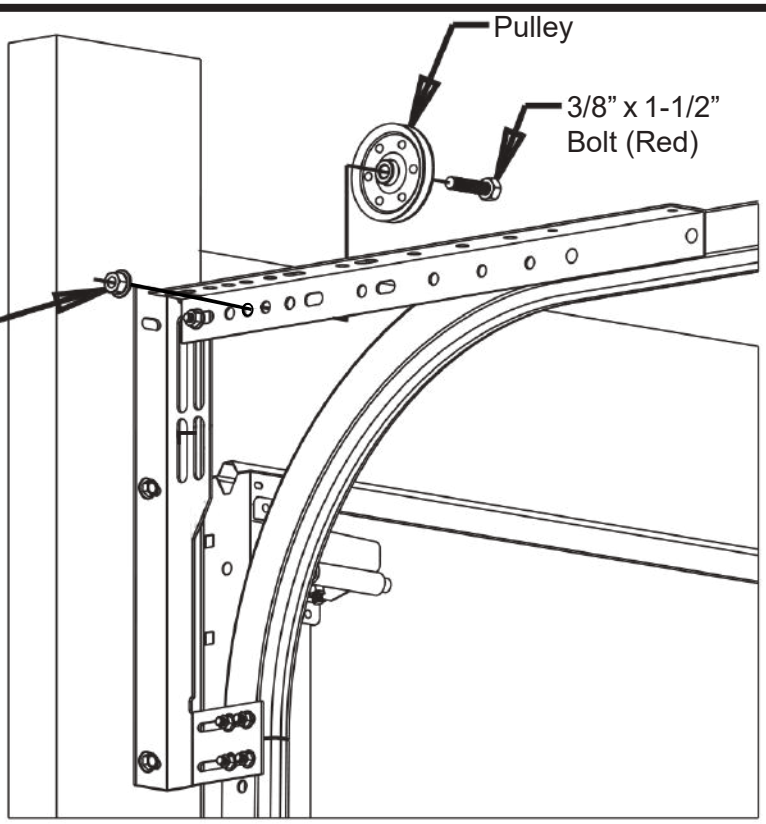

1 Attach pulley with a 3/8” x 1-1/2” bolt and hex nut on angle which attaches horizontal track to flag angle. Repeat this step for opposite side of door.

2 With a minimum of two people, raise door to fully open position.

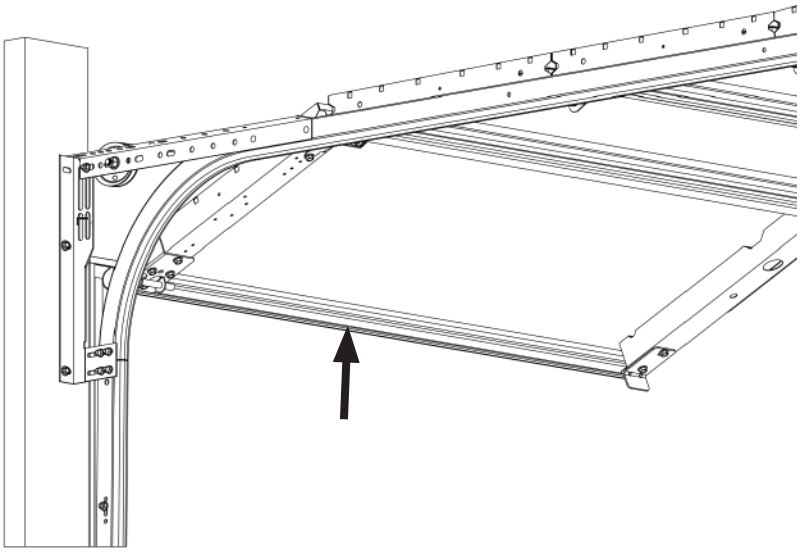

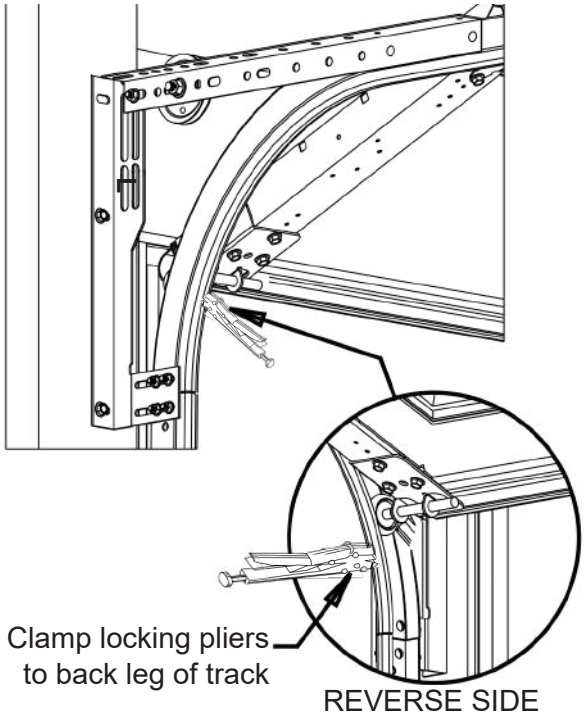

3 Secure the door firmly at both sides with locking piers. Connected to the track as shown.

Step 32B: Extension Spring Assembly

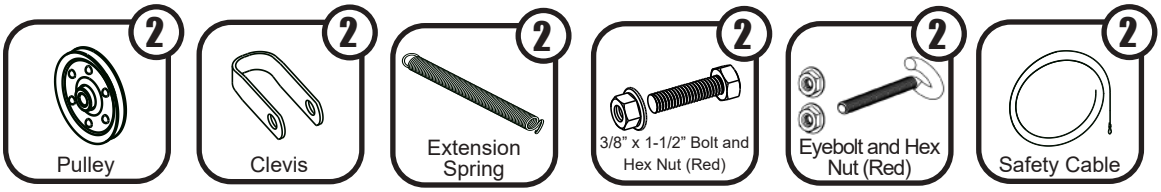

4 Assemble spring as shown. Bolt a clevis and pulley on one end

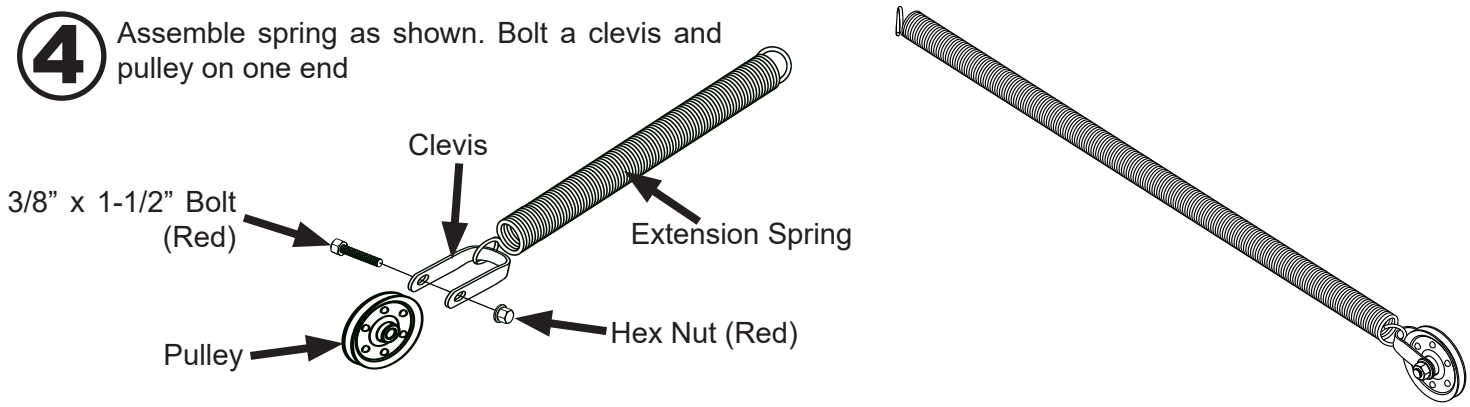

Warning! Extension springs can cause severe damage, personal injury or even death if they are not properly restrained. In the event of a spring failure the safety cable will prevent the spring from being propelled away from the door.

Both springs are the same, it will not matter which one you assemble first.
The spring cable is thicker than the safety cable. Be sure to use the correct cable for the appropriate step.

5 Thread safety cable through spring assembly.

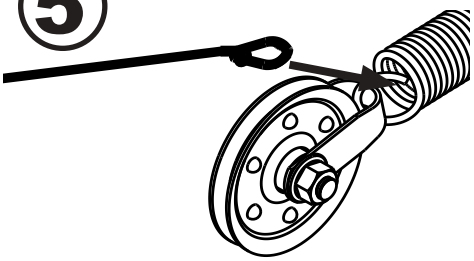

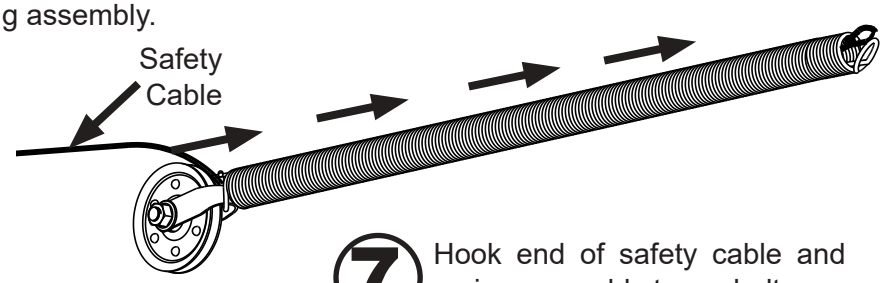

7 Hook end of safety cable and spring assembly to eyebolts.

6 Attach eyeblots to both door track support assemblies.

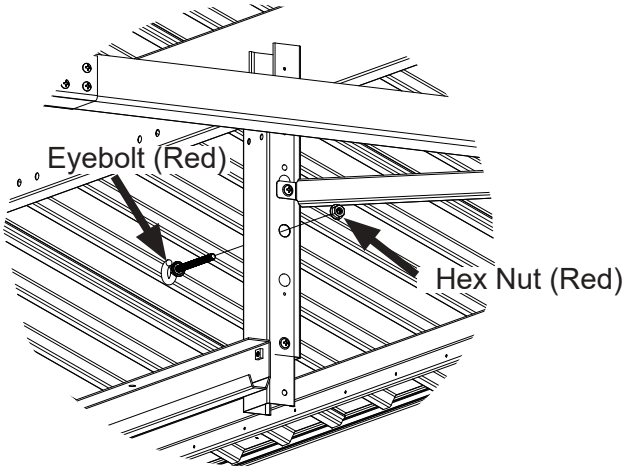

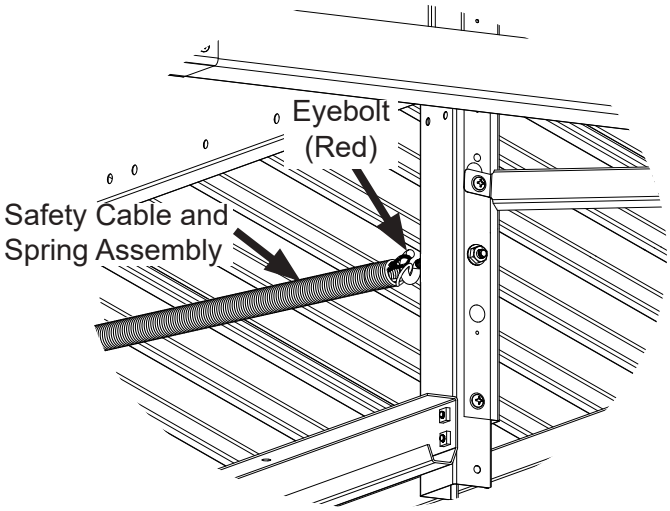

Step 32C: Extension Spring Assembly

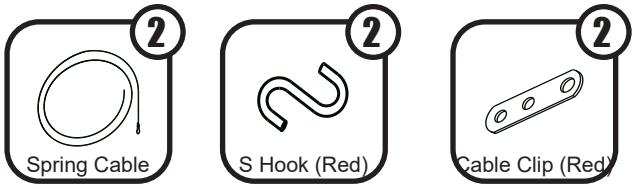

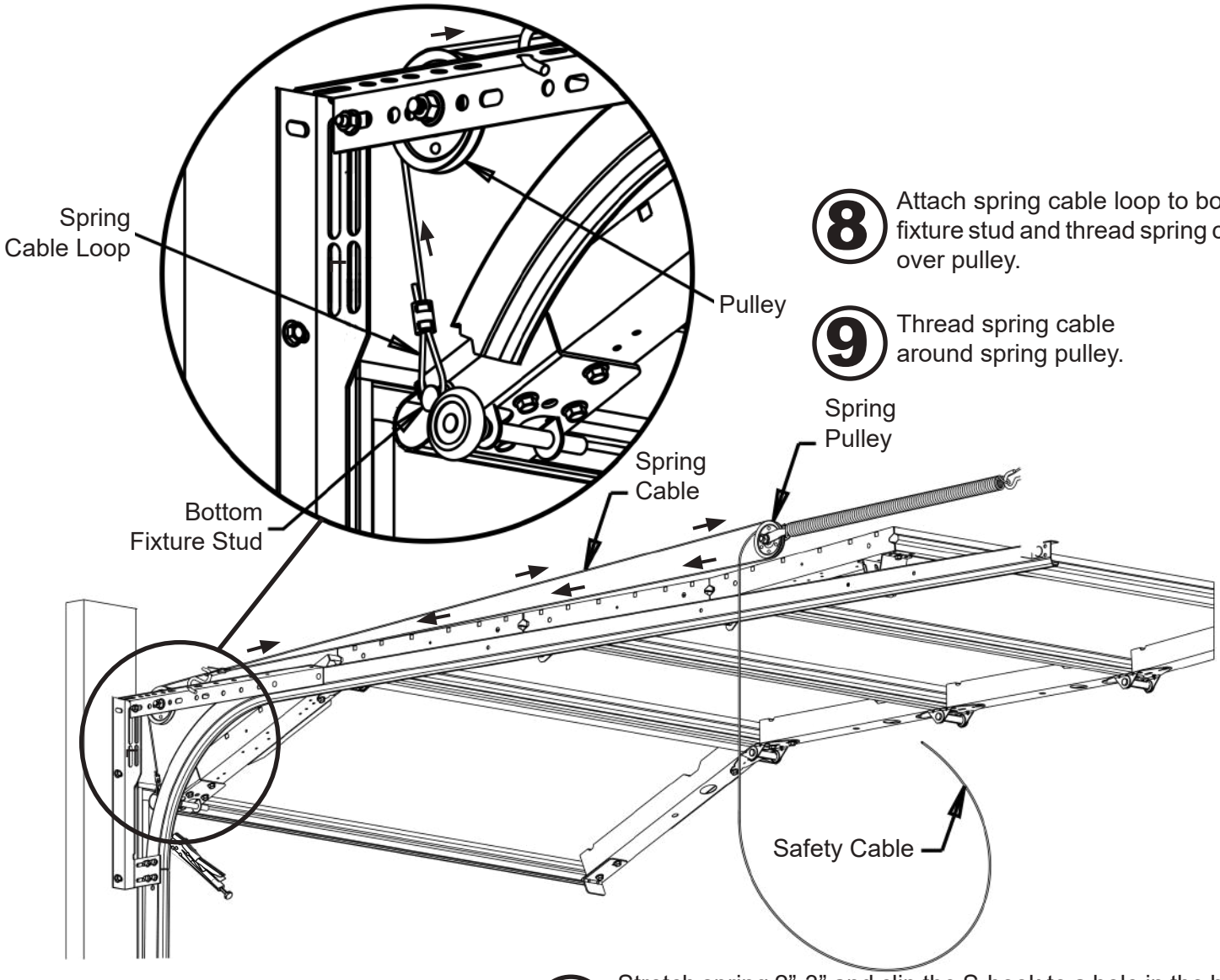

8 Attach spring cable loop to bottom fixture stud and thread spring cable over pulley.

9 Thread spring cable around spring pulley.

10 Tie a cable clip to the spring cable and connect it to an S-hook.

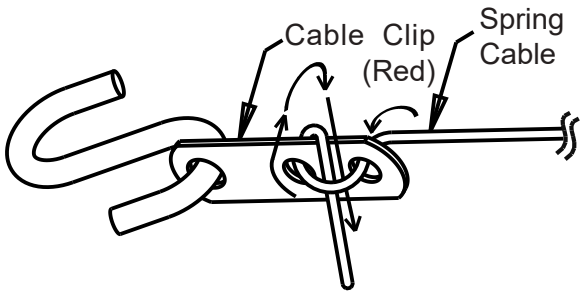

11 Stretch spring 2”-3” and clip the S-hook to a hole in the horizontal angle. This is referred to as initial stretch and may need adjustment (see end of extension spring assembly details).

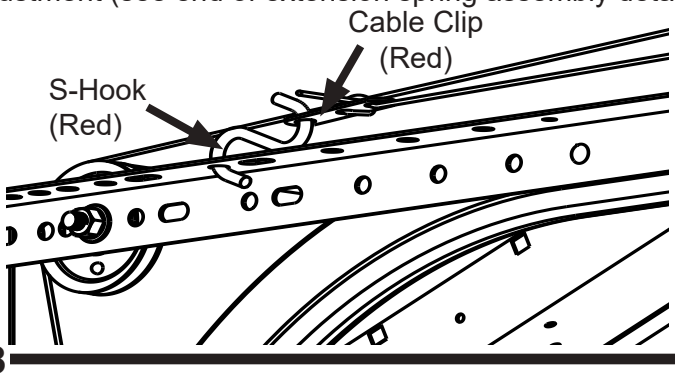

Step 32D: Extension Spring Assem-

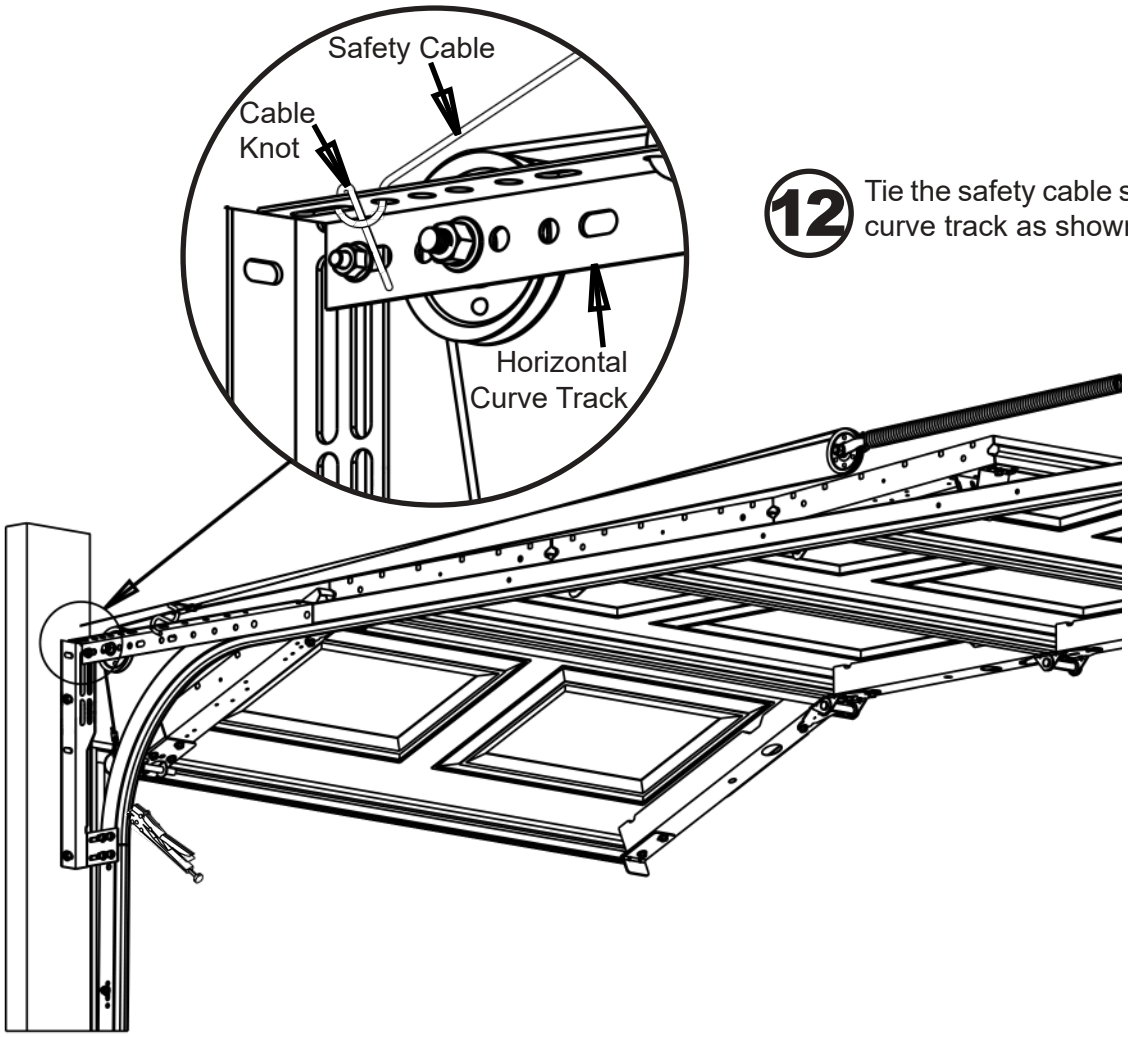

12 Tie the safety cable securely to the horizontal curve track as shown.

Repeat steps 4 through 12 for the other spring.

Lowering the door and spring adjustment.
Warning! Until all adjustments are completed, always assume you will have to physically support the full weight of the door. Make sure adequate help is available.
Warning! Never place your fingers in or near section joints while the door is moving.
Warning! All spring component parts whether part of the spring assembly, attached to the door, or attached to the wall are now under tension and are extremely dangerous.
Warning! Spring adjustments from this point onward must be performed in accordance with all warnings and directions as previously stated.
Warning! Spring adjustments can only be performed when door is in fully open position and door restraints are applied to tracks.

With one person holding door in the fully open position, carefully remove locking pliers.
Slowly lower door, testing the balance of the springs. If door does not lift off of the floor by itself, or does not roll back to the floor when not supported, it is properly counterbalanced.
If door lifts off of floor by itself, the springs are too strong and the initial stretch must be reduced.
If door rolls back to floor, the springs are too weak and the initial stretch must be increased.

Finalize the track adjustments
Operate door through one full cycle. Check door stops and top fixture for proper seal. If door is not functioning correctly, check for binding against jamb, header or tracks.

Step 33

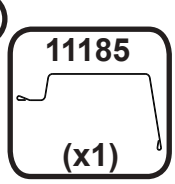

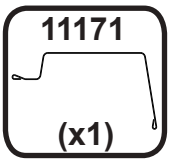

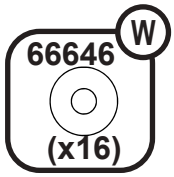

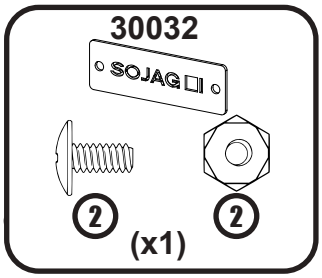

NOTE Painted fasteners are to be used on painted parts
Make sure painted fasteners match wall color.

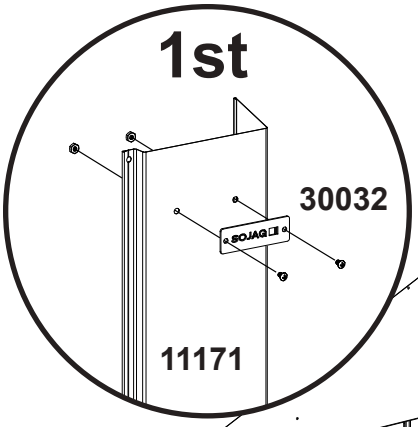

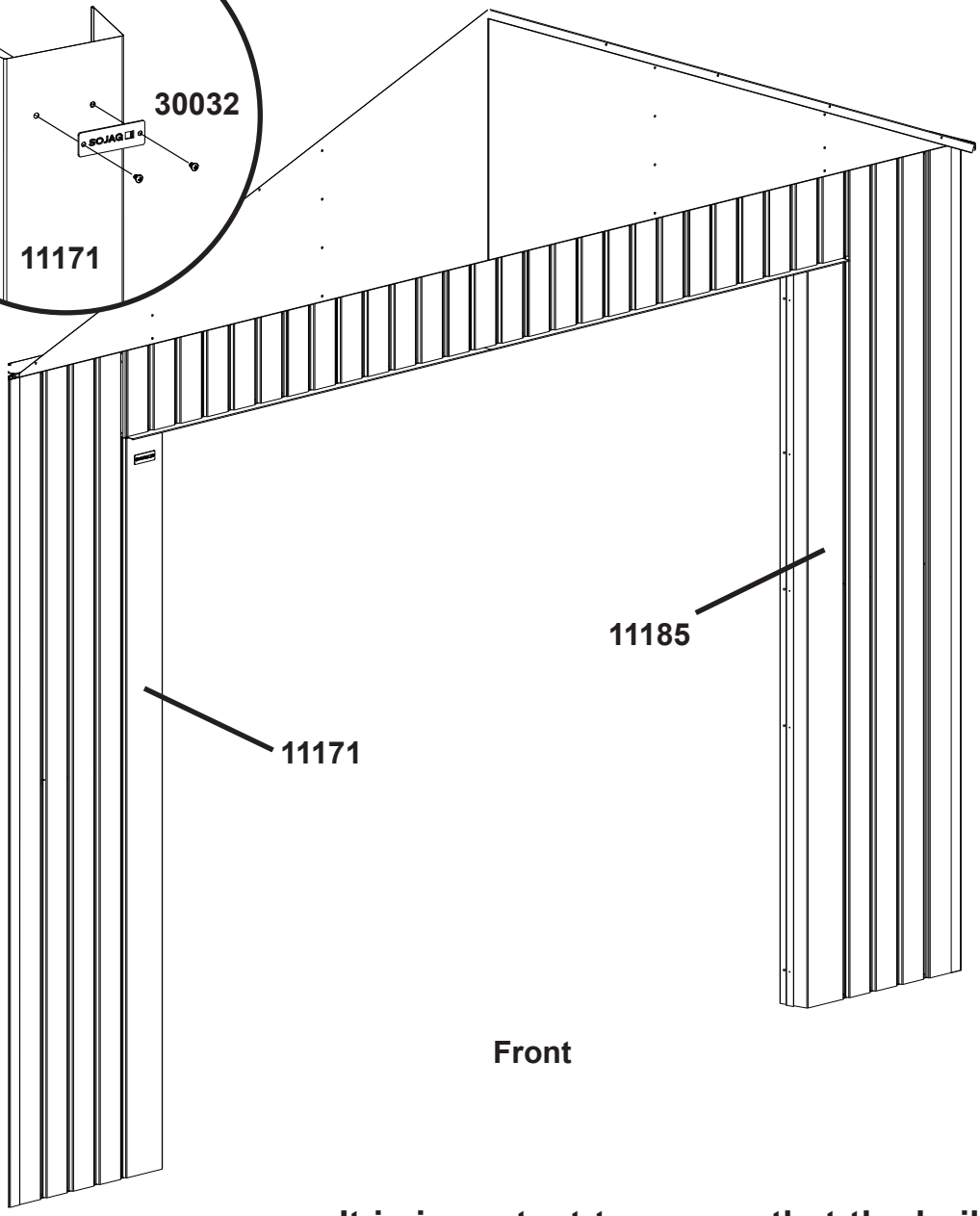

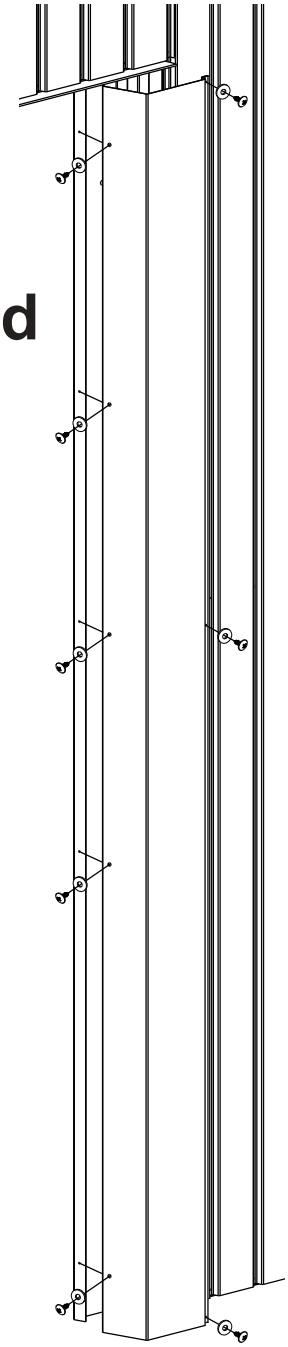

IMPORTANT: **It is important to ensure that the building is anchored after construction. See page 6 for recommended ways of anchoring.**

Installing Garage Opener

The garage is designed to accomodate a variety of centerline track garage door openers, and the installation process may vary.
Be sure to follow the instructions included with the garage door opener you are using. Attach the opener at the locations highlighted below.

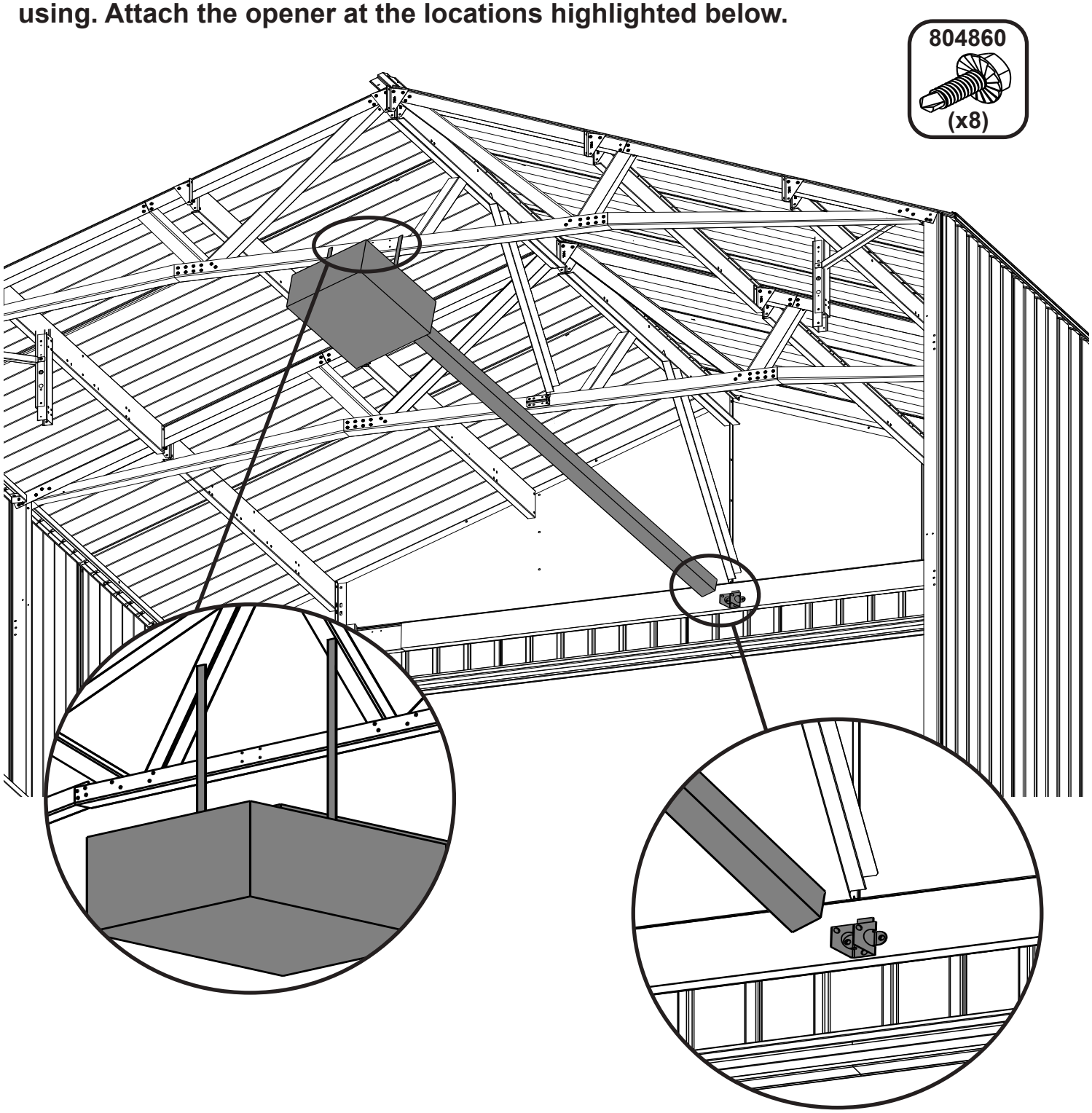

NOTE: Attach Bracket to the Header with the screws provided. Do not attach it to the Gable or Gable Strut.

ASSEMBLY NOTES