LG

OLED77W6* OLED83W6*

MFL05813101260 7REV01

https://www.youtube.com/watch?v=jEKYd6Ti54M





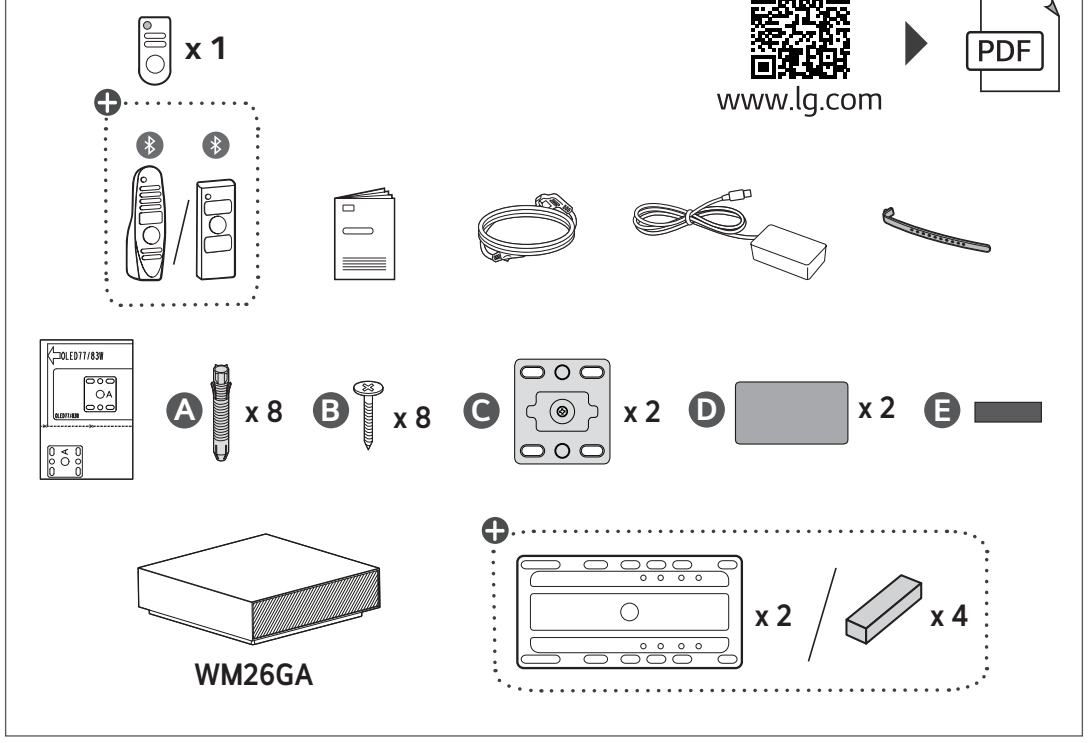

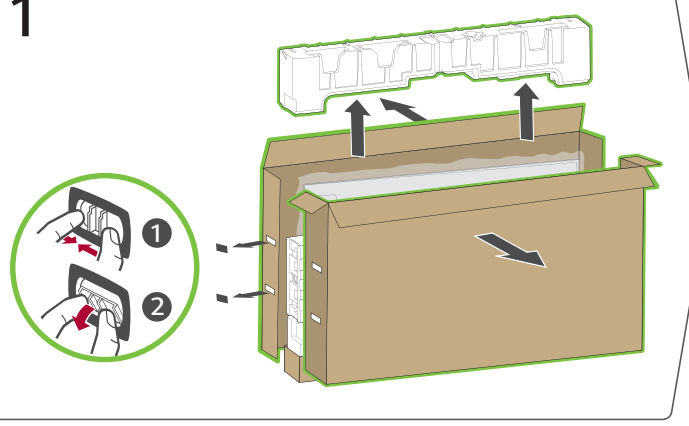

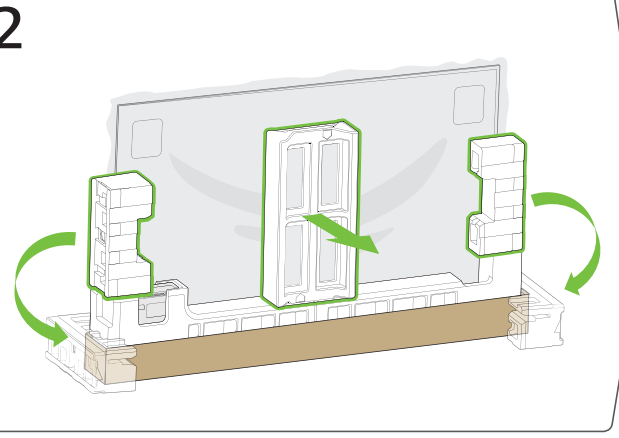

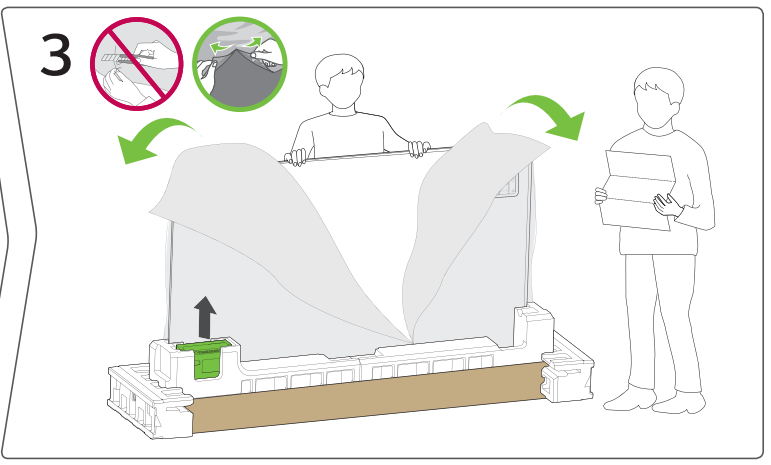

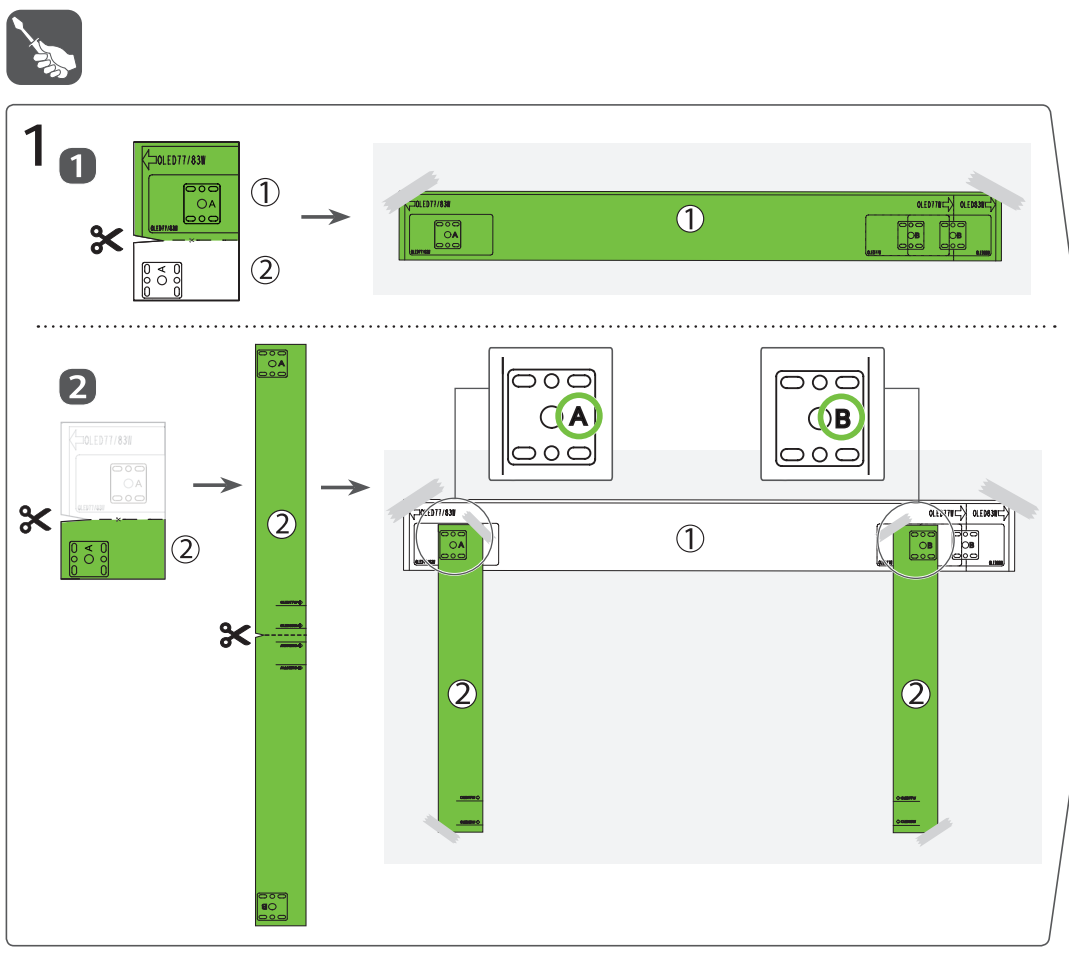

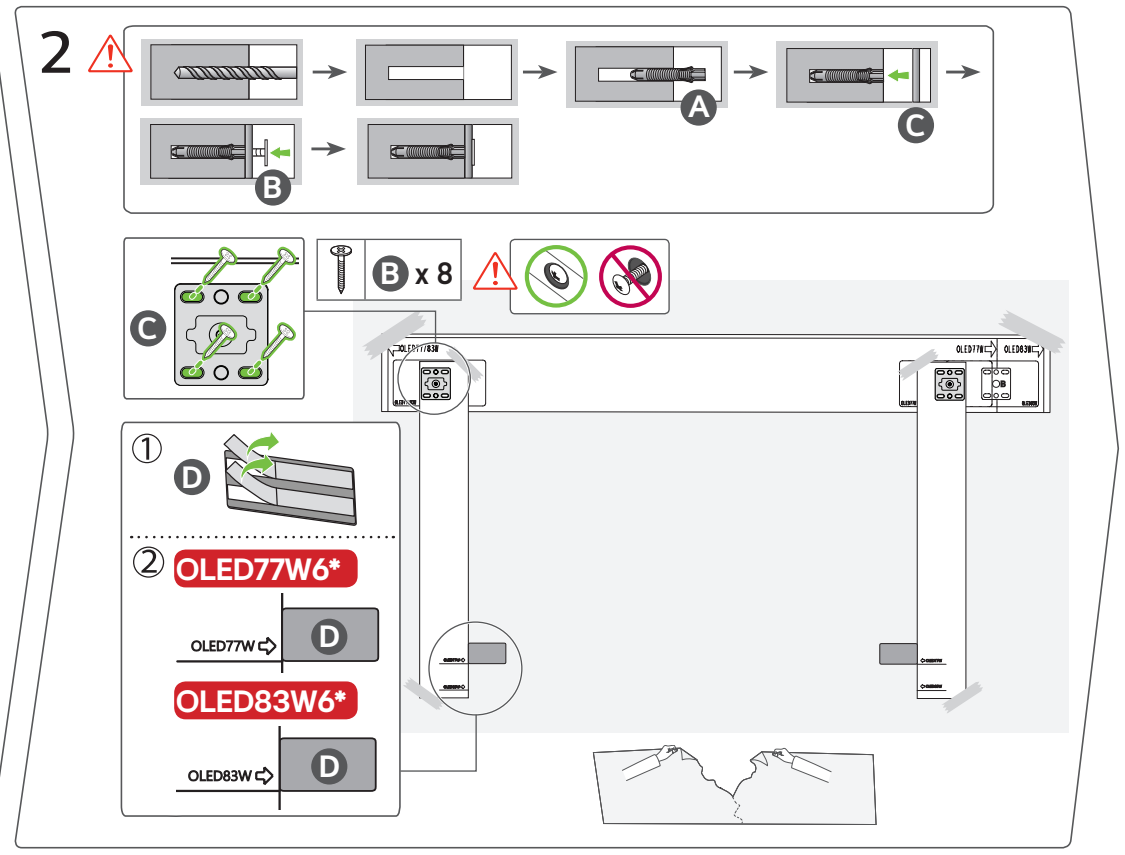

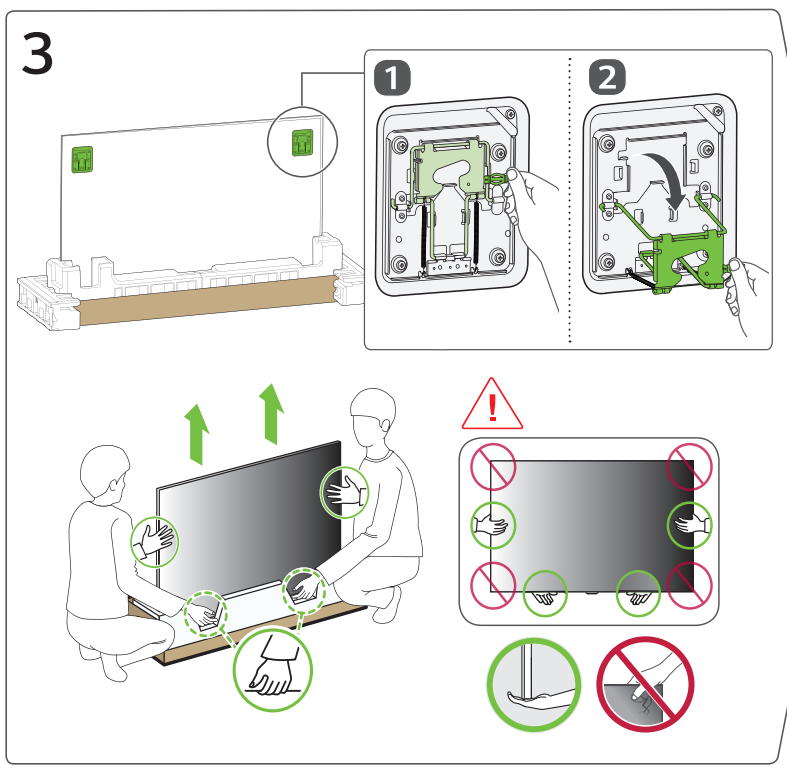

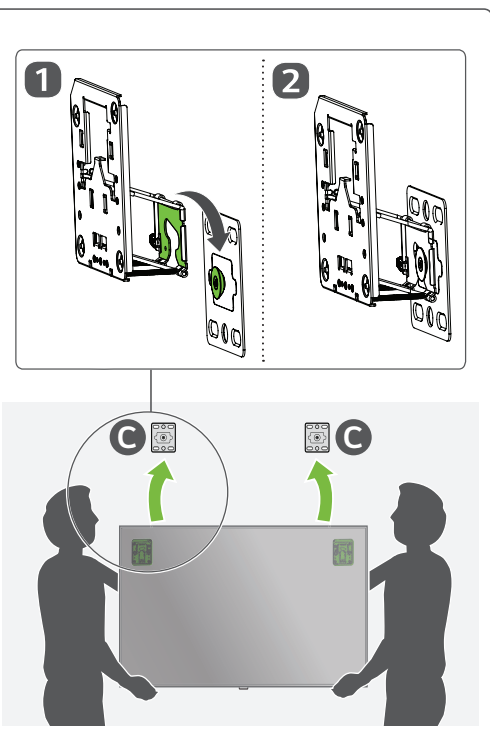

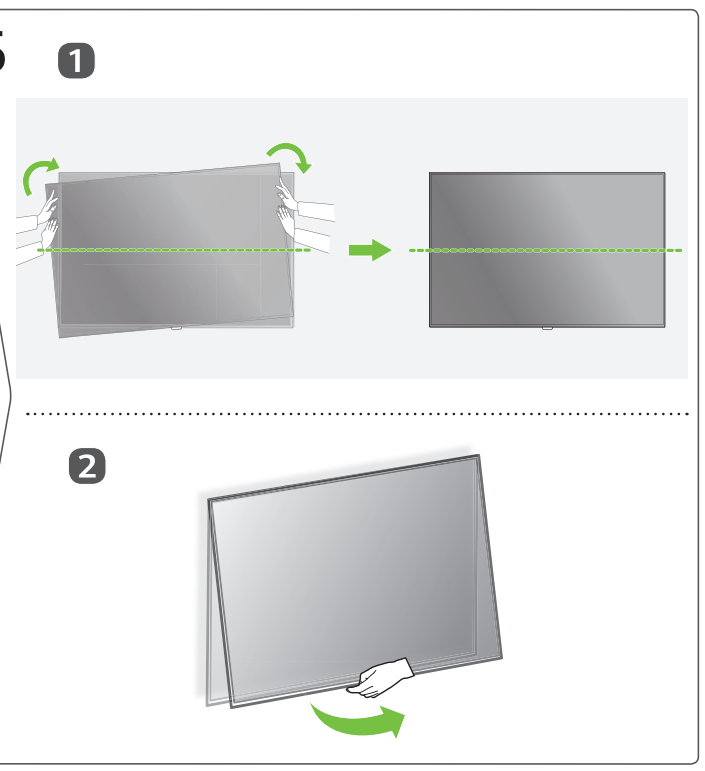

3

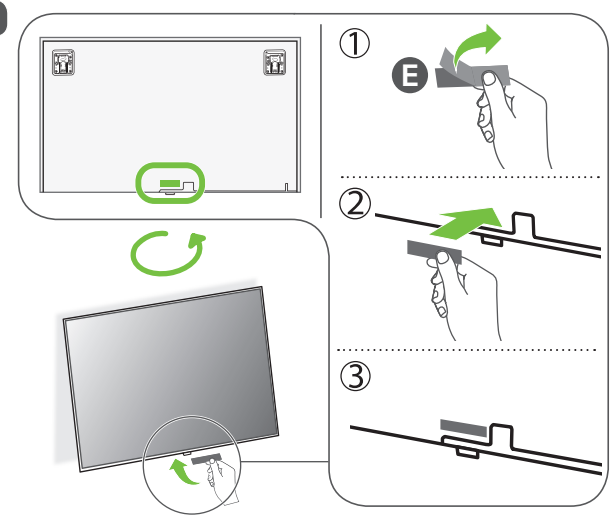

4

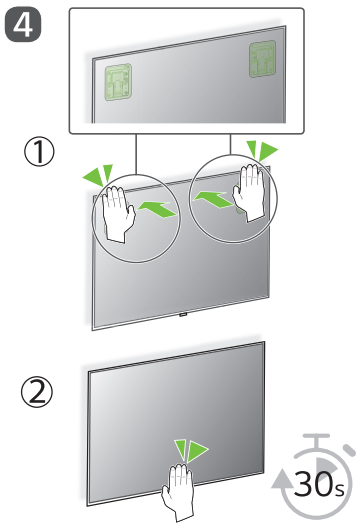

6

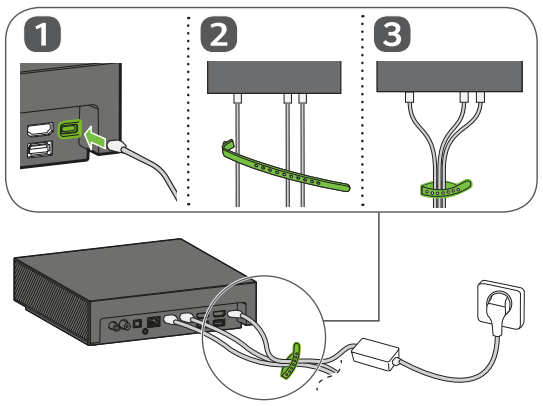

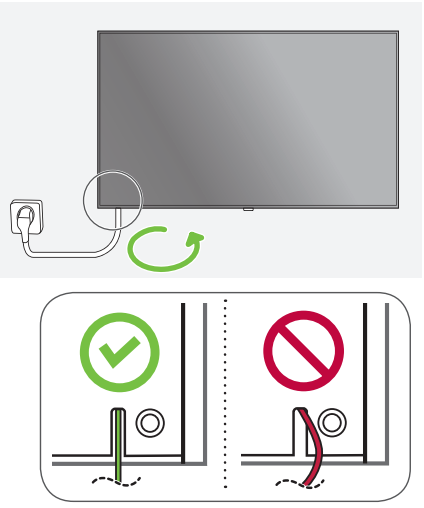

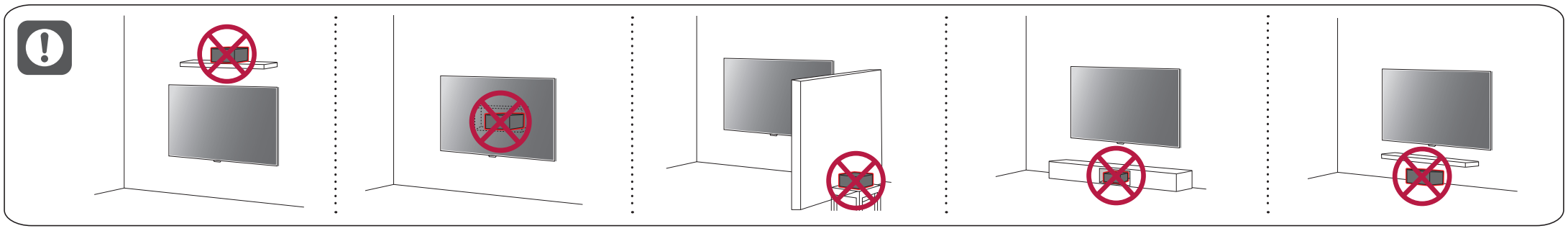

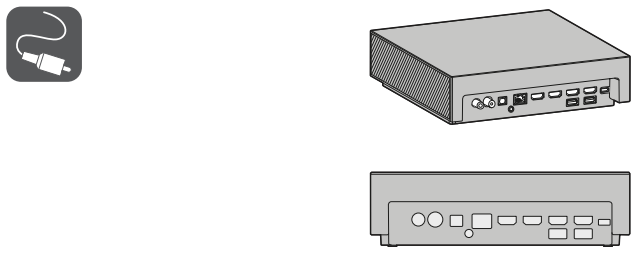

ANT



SORTIE AUDIO NUMÉRIQUE OPTIQUE

OPTICAL DIGITAL AUDIO



LAN

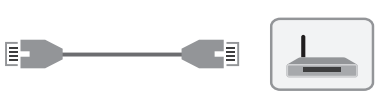

HDMI



HDMI eARC/ARC

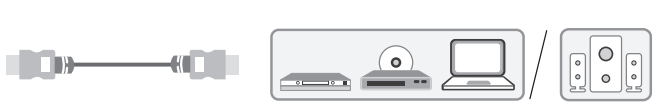

Émetteur à infrarouge

IR Blaster



COMMON INTERFACE

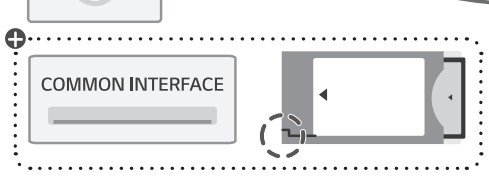

USB

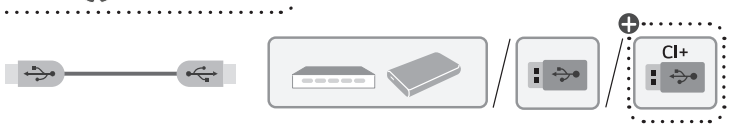

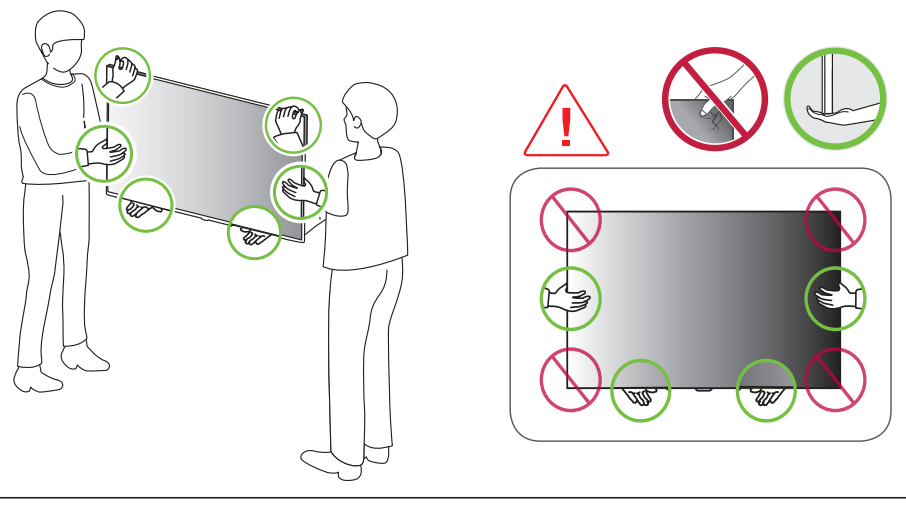

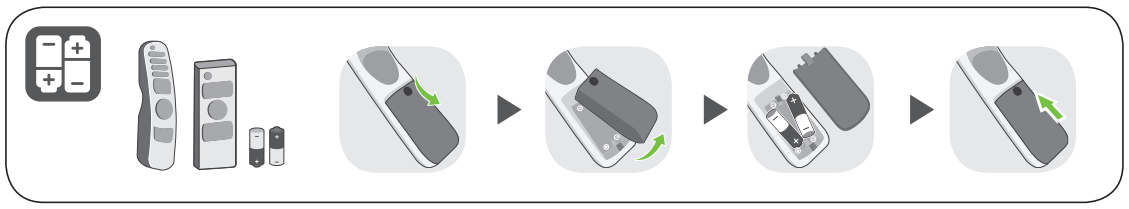

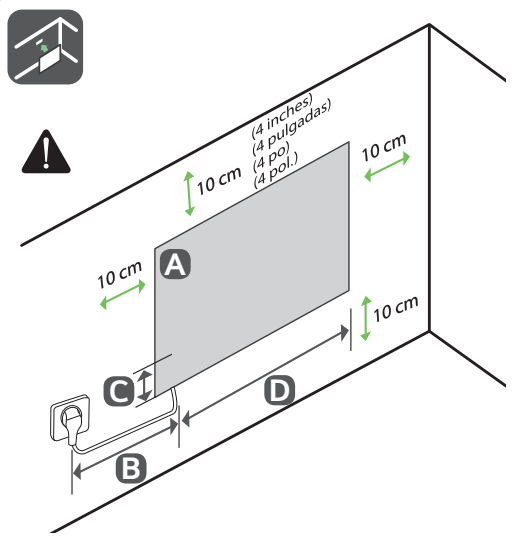

* : 0~9, A~Z

mm (inches / pulgadas / po / pol.)

A	B	C	D
OLED77W6*	≧ 1.5 m (59.0) inches	54 (2.1) inches	1 633 (64.2) inches
OLED83W6*			1 762 (69.3) inches

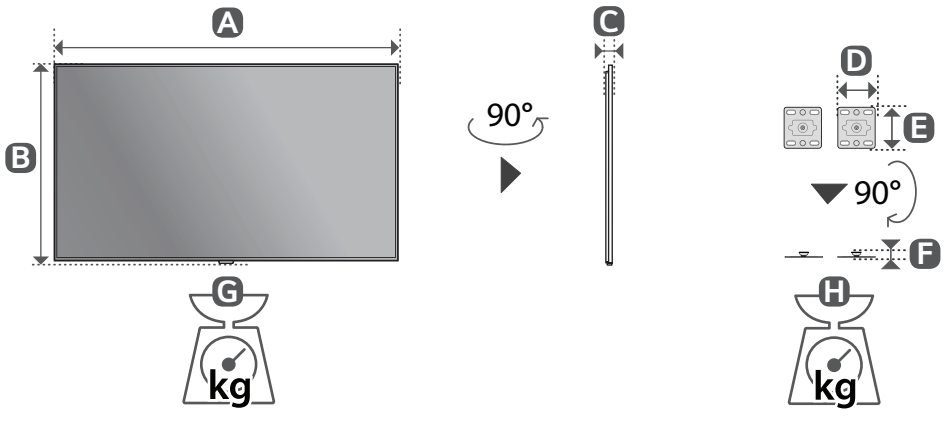

	mm (inches / pulgadas / po / pol.)						**kg** (lbs / libras / lb)	
	A	B	C	D	E	F	G	H
OLED77W6*	1 713 (67.4)	988 (38.8)	9.95 (0.3)	80 (3.1)	88 (3.4)	6.1 (0.2)	20.2 (44.5)	0.13 (0.2)
OLED83W6*	1 844 (72.5)	1 061 (41.7)	9.95 (0.3)				22.5 (49.6)	

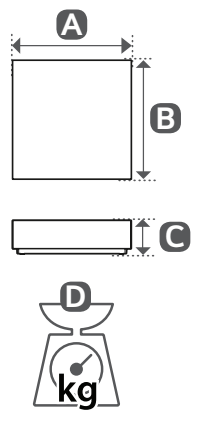

	mm (inches / pulgadas / po / pol.)			**kg** (lbs / libras / lb)
	A	B	C	D
WM26GA	245 (9.6)	245 (9.6)	69.8 (2.7)	1.9 (4.1)

Printed in Korea
Imprimé en Corée

* : 0~9, A~Z