FRIGIDAIRE

frigidaire.com/register

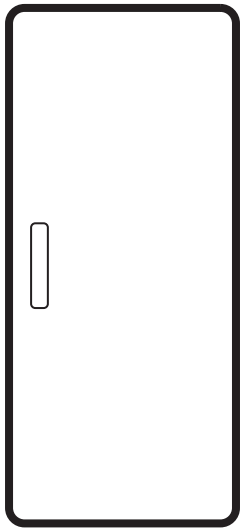

PRDA2033AF

ENGLISH

1. IMPORTANT SAFETY INFORMATION **2**
2. FEATURES.....**4**
3. INSTALLATION.....**5**
4. DOOR REMOVAL.....**6**
5. DOOR HANDLE INSTALLATION.....**7**
6. WATER SUPPLY CONNECTION.....**8**
7. CONTROLS AND SETTINGS.....**10**
8. INTERNAL WATER DISPENSER.....**11**
9. STORAGE FEATURES.....**12**
10. FILTER REPLACEMENT.....**13**
11. NORMAL OPERATING SOUNDS....**15**
12. CARE AND CLEANING.....**16**
13. TROUBLESHOOTING.....**16**
14. LIMITED WARRANTY.....**17**
15. QUEBEC RIGHT TO REPAIR.....**18**

1. IMPORTANT SAFETY INFORMATION

1.1 Keep a record for quick reference

Serial Number Location

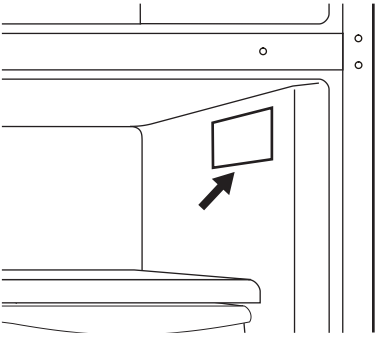

Model number
.....
Serial number
.....
Purchase date
.....

Read all instructions before using this appliance. Keep this user manual for future reference.

⚠ WARNING!

You must follow these guidelines to ensure that your appliance's safety mechanisms are operating correctly.

1.2 Safety definitions

⚠This is the safety alert symbol. It is used to alert of potential personal injury hazards. Obey all safety messages that follow this symbol to avoid possible injury or death.

⚠ DANGER

Indicates an imminently hazardous situation which, if not avoided, will result in death or serious injury.

⚠ WARNING!

Indicates a potentially hazardous situation which, if not avoided, could result in death or serious injury.

⚠ CAUTION!

Indicates a potentially hazardous situation which, if not avoided, may result in minor or moderate injury.

➔ IMPORTANT

Indicates installation, operation or maintenance information which is important but not hazard-related.

1.3 Child safety

This appliance is not intended for use by persons (including children) with reduced physical, sensory or mental capabilities, or

lack of experience and knowledge, unless they have been given supervision or instruction concerning use of the appliance by a person responsible for their safety. Destroy or recycle the carton, plastic bags, and any exterior wrapping material immediately after the appliance is unpacked. Children should never use these items to play. Cartons covered with rugs, bedspreads, plastic sheets or stretch wrap may become airtight chambers, and can quickly cause suffocation.

1.4 Important safety instructions

⚠ DANGER



Risk of fire or explosion. Flammable refrigerant used. Do not use mechanical devices to defrost the appliance. Do not puncture refrigerant tubing.
Risk of fire or explosion. Flammable refrigerant used. To be repaired only by trained service personnel. Use only manufacturer-authorized service parts. Any repair equipment used must be designed for flammable refrigerants. Follow all manufacturer repair instructions. Do not puncture refrigerant tubing.

⚠ CAUTION!



Risk of fire or explosion due to puncture of refrigerant tubing. Follow handling instructions carefully. Flammable refrigerant used.

This appliance is for storage only and should not be used for any other purpose.
Do not store or use gasoline or other flammable vapors and liquids in the vicinity of this or any other appliance.
Do not store explosive substances such as aerosol cans with a flammable propellant in this appliance.
Do not operate the appliance in the presence of explosive fumes
Avoid contact with any moving parts of automatic ice maker.
Remove all staples from the carton. Staples can cause severe cuts, and also destroy finishes if they come in contact with other appliances or furniture.

⚠ WARNING!

Do not use electrical appliances inside the food storage compartments of the appliance unless they are of the type recommended by the manufacturer.

⚠ WARNING!

CALIFORNIA RESIDENTS ONLY
WARNING! Cancer and Reproductive Harm http://www.P65Warnings.ca.gov

1.5 Electrical information

The appliance must be plugged into its own dedicated 115 Volt, 60 Hz., 15 Amp, AC only electrical outlet. The power cord of the appliance is equipped with a three-prong grounding plug for your protection against electrical shock hazards. It must be plugged directly into a properly grounded three-prong receptacle. The receptacle must be installed in accordance with local codes and ordinances. Consult a qualified electrician. Do not use an extension cord or adapter plug.

⚠ WARNING!

Avoid fire hazard or electric shock.

If the power cord is damaged, it should be replaced by an authorized service technician to prevent any risk.
Never unplug the appliance by pulling on the power cord. Always grip the plug firmly, and pull straight out from the receptacle to prevent damaging the power cord.
Unplug the appliance before cleaning and before replacing the light bulb to avoid electrical shock.
Performance may be affected if the voltage varies by 10% or more. Operating the appliance with insufficient power can damage the compressor. Such damage is not covered under your warranty.
Do not plug the unit into an electrical outlet controlled by a wall switch or pull cord to prevent the appliance from being turned off accidentally.
Do not pinch, knot, or bend the power cord in any manner.

⚠ WARNING!

When positioning the appliance, ensure the supply cord is not trapped or damaged.
Do not locate multiple portable socket-outlets or portable power supplies at the rear of the appliance.

⚠ WARNING!

Do not, under any circumstances, cut, remove, or bypass the grounding prong (A). Always use the power cord with a three-prong grounded plug and grounding type wall receptacle.

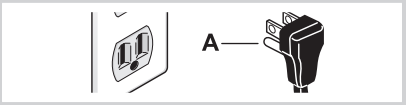

1.6 Disposal of the appliance

⚠ CAUTION!

Risk of fire or explosion. Dispose of the appliance properly in accordance with the applicable federal or local regulations. Flammable refrigerant used.

Risk of child entrapment
Child entrapment and suffocation are not problems of the past. Junked or abandoned appliances are still dangerous – even if they will sit for “just a few days”. If you are getting rid of your old appliance, follow the instructions below to help prevent accidents.
We strongly encourage responsible appliance recycling/disposal methods. Check with your utility company or visit http://www.energystar.gov/recycle for more information on recycling your old appliance.
Before you throw away your old appliance:

- Remove doors.
- Leave shelves in place so children may not easily climb inside.
- Have it removed by a qualified service technician.

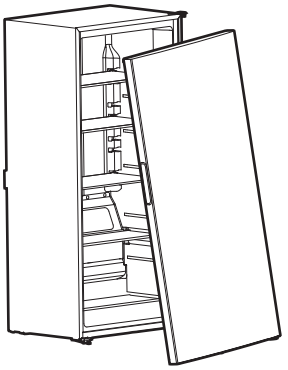

2. FEATURES

Features may vary by model. You can purchase accessories at Frigidaire.com or by calling toll-free 1-800-374-4432.

2.1 Product overview

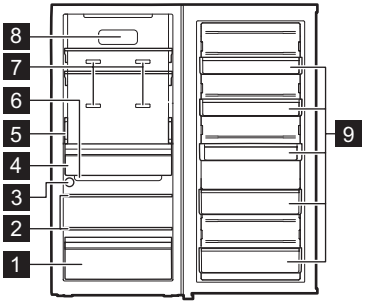

1 Drawer
2 Shelves
3 Water Filter
4 Crisper
5 Internal Water Dispenser
6 Appliance Control Display
7 Air Vents
8 Air Filter
9 Door Bins

3. INSTALLATION

This User Manual provides general installation and operating instructions for your model. We recommend using a service or kitchen contracting professional to install your appliance. Use the appliance only as instructed in this User Manual. Before starting the appliance, follow these important first steps.

3.1 Installation Checklist

Doors
❒ Handles are secure and tight
Leveling
❒ Cabinet is setting solid on all corners
Electrical Power
❒ House power is turned on
❒ Appliance is plugged in
Final Checks
❒ Shipping material is removed
❒ Registration card is sent in
Allow the appliance to operate with the doors closed for at least 8 hours before loading it with food.

3.2 Installation

Installation should be performed by a qualified installer. The appliance is heavy. When moving the appliance raise the anti-tip bracket. Cover the floor with cardboard to avoid floor damage. Always pull the appliance straight out. Do not wiggle or walk the appliance.

Location

⚠ WARNING!
This appliance is intended for use in residential household and similar interior applications such as: kitchen / kitchenette, pantry room and other interior residential type environments.

Install the appliance in a location where the ambient temperature is between 55°F (13°C) and 110 °F (43 °C).

- Place the appliance out of direct sunlight and away from the range, dishwasher, or other heat sources.
- Install the appliance on a level floor that is strong enough to support a fully loaded appliance.

Allow the following clearances for ease of installation, proper air circulation, plumbing, and electrical connections:
- Top 1" (25.4 mm)
- Sides 3/16" (4.76 mm)
- Back 1" (25.4 mm)

Do not block the lower front of the appliance.

Anti-tip brackets
The anti-tip brackets prevent the appliance from tipping forward. Turn the anti-tip brackets clockwise on each side until they contact the floor. Do not raise the appliance.

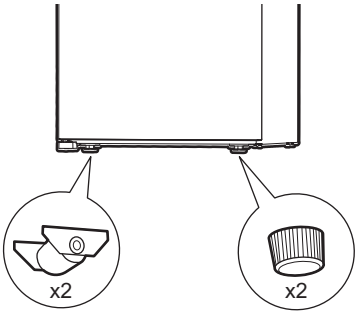

3.3 Leveling

When positioning the appliance, ensure that it is level, with all bottom corners resting firmly on a solid floor. You can adjust this using the two leveling feet located at the front bottom of the appliance.

3.4 Niche dimensions

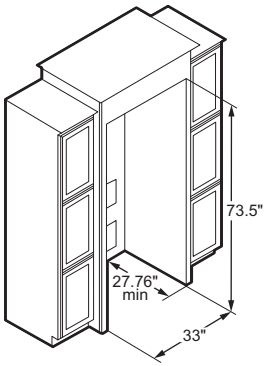

3.5 Filtered Ice Kit

We recommend using a filtered ice kit when installing a freezer and refrigerator side by side to ensure the ice maker receives filtered water.

3.6 Single Unit Door Swing Reversal

Order the kit on Frigidaire.com or by calling 1-800-374-4432 (Electrolux.ca or 1-800-265-8352 in Canada).

- Frig Pro TT Grey Liner Freezer: Left-hand to Right-hand Swing FPGTTDRKTF
- Frig Pro TT Grey Liner Refrigerator: Right-hand to Left-hand Swing FPGTTDRKTR

Dual Unit Door Reversal

Moving the freezer door to the refrigerator also changes the right-hand swing to a left-hand swing.

Moving the refrigerator door to the freezer also changes the left-hand swing to a right-hand swing.

NOTE

Transfer the hinges and associated hardware in order to switch doors.

4. DOOR REMOVAL

4.1 Door Removal

⚠ CAUTION!

Doors and the appliance are heavy. Two people are required for removal and lifting.

Tools required: socket wrench: set , screwdriver: Phillips™ head or #2.

1. Turn off, unplug and empty the appliance. Close the doors.
2. Remove the top hinge cover.

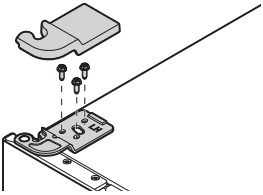

3. Support the door while removing the top hinge from the cabinet.
4. Use a wrench or socket to remove the M5x16mm hex head screws from the top hinge.
5. Lift the door upward, then pull it away from the cabinet to release it from the bottom hinge pin.
6. Reverse the preceding steps to reinstall the door. Tighten all screws to the specified torque to prevent hinge slippage.

When removing the door for transport, maintain a uniform 11 mm gap between the cabinet frame and door metal around the entire perimeter to ensure proper gasket sealing and prevent frost buildup. Measure this 11 mm clearance from cabinet metal to door metal at several points.

5. DOOR HANDLE INSTALLATION

⚠ CAUTION!

Wear gloves and safety goggles. Use extreme caution when installing these handles.
The rounded end of the handles may be sharp (some models).

5.1 Door Handle Installation

Wear gloves and use extreme caution when installing the handles.

1. Remove the handle and any protective packaging from inside the appliance.
2. Attach the shoulder bolts to the door.
3. Position the handle end caps over the upper and lower shoulder bolts, ensuring the holes for the set screws are facing away from the hinge.
4. While holding the handle firmly against the door, fasten the upper and lower Allen set screws with the supplied Allen wrench.
5. Tighten and sub flush all set screws (Allen set screw should be seated just below the surface of the end cap) of the handle end cap. Tightly draw the end caps to the door with no gaps

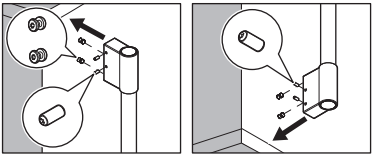

6. WATER SUPPLY CONNECTION

6.1 Before Installing The Water Supply Line

⚠ WARNING!

To avoid electric shock, which can cause death or severe personal injury, disconnect the appliance from the electrical power before connecting a water supply line to the appliance. Connect the appliance to the potable water supply.

IMPORTANT

Ensure your water supply line connections comply with all local plumbing codes.

⚠ CAUTION!

To avoid property damage:

- Use copper or stainless steel braided tubing for the water supply line. Do not use water supply tubing made of 1/4" plastic. Plastic tubing greatly increases the potential for water leaks, and the manufacturer will not be responsible for any damage if you use plastic tubing for the supply line.
- Do not install water supply tubing in areas where temperatures fall below freezing.
- Chemicals from a malfunctioning softener can damage the ice maker. If the ice maker is connected to soft water, ensure that the softener is maintained and working properly.

6.2 You will need

- Basic tools: adjustable wrench, flat-blade screwdriver, and Phillips™ screwdriver.
- Access to a household cold water line with water pressure between 30 and 100 psi.
- A water supply line made of 1/4" (6.4 mm) OD, copper or stainless steel tubing. To determine the length of tubing needed, measure the distance from the ice maker inlet valve at the back of the appliance to your cold water pipe. Then add approximately 6 ft (1.8 m) to ensure you can move the appliance for cleaning.
- A shutoff valve to connect the water supply line to your household water system. Do not use a self-piercing type shutoff valve.
- Do not reuse compression fitting or use thread seal tape.
- A compression nut and ferrule (sleeve) for connecting a copper water supply line to the ice maker inlet valve.

NOTE

Check with your local building authority for recommendations on water lines and associated materials prior to installing your new refrigerator. Depending on your local/state building codes, Frigidaire recommends:

- for homes with existing valves Smart Choice® water line kit 5305513409 with a 6 ft (1.8 m) stainless steel water line.
- for homes without an existing valve Smart Choice® water line kit 5305510264 with a 20 ft (6 m) copper water line with self-tapping saddle valve.

Please refer to Frigidaire.com for more information.

6.3 Installing the Water Supply Line

IMPORTANT

Your appliance water supply system includes several tubing lines, a water filter, and a water valve. To ensure that your water dispenser works properly, this system must be completely filled with water when your appliance is first connected to the household water supply line.

Connection to household water supply with 1/4" compression fitting

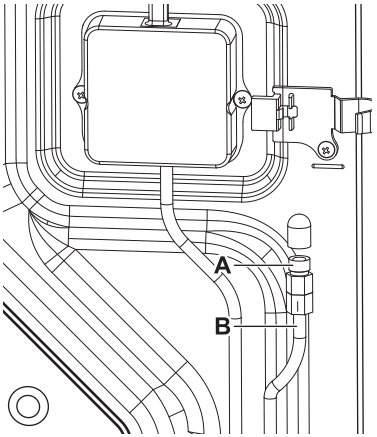

A. Water inlet fitting
B. Plastic tubing to water valve

6 ft (1.8 meters) Stainless Steel water line from household water supply line



Water inlet brass fitting

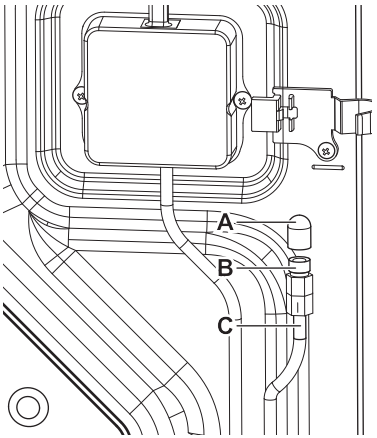

A. Plastic cap
B. Remove plastic cap from water inlet fitting
C. 1/4" plastic tube to water valve

To connect water tube to household water supply:

1. Disconnect refrigerator from electric power source.
2. Place end of water supply line into sink or bucket. Turn on water supply and flush supply line until water is clear. Turn off water supply at shutoff valve.

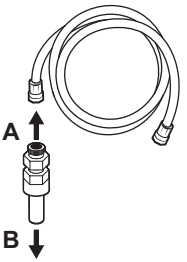

A. To household water supply
B. To unit water valve

3. Open the locking clips and grab the water line coming from the refrigerator. Remove the plastic cap from the water inlet fitting and discard the cap.



4. If using (recommended) stainless steel braided tubing - the nut and the ferrule are already assembled on the tubing. Slide the compression nut onto the water inlet fitting and finger tighten.
5. Using two 1/2" wrenches, one to hold the household water line nut (A) and the other to hold the water inlet fitting nut (B), tighten a half turn with the wrench (A). Do not over tighten.

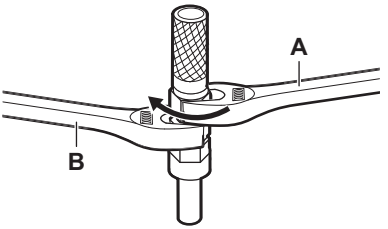

6. Replace the connected tubes into the clips and lock the clips back in place to keep the tubing in the right position.
7. Turn on water supply at shutoff valve and tighten any connections that leak.
8. Reconnect refrigerator to electrical power source.
9. Purge air from the Water Dispenser System by operating the water dispenser for 3 - 4 minutes. This requires dispensing several glasses of water.

7. CONTROLS AND SETTINGS

Control Panel



Control Lock

Press ⋯ to wake the display or put it in sleep mode.

Press and hold ⋯ for 3 seconds to lock or unlock the appliance. 🔒 is lit when the controls are locked. Lock prevents unintentional setting changes.

Air Filter(s)

Press and hold AIR FILTERS to reset after replacing the air filter(s).

Water Filter

Press and hold WATER FILTER to reset after replacing the water filter.

Temperature Units °F/°C

Press TEMP F-C to toggle between Fahrenheit (°F) and Celsius (°C).

Temperature Adjustment

Press − + to adjust the temperature.

The temperatures range from 34°F (1°C) to 44°F (7°C).

Water Dispenser

Press and hold WATER DISP. for 3 seconds to enable or disable water dispensing. 💧 is lit when water dispenser is enabled.

Chill Boost

Prior to grocery shopping, activate Chill Boost to lower the temperature and cool food faster. Press CHILL BOOST to activate or deactivate Chill Boost. ❄ is lit when Chill Boost is active.

Alerts

Press ⋯ to reset the alarm.

Power Outage: After a power outage, the indicator lights up, and the alarm sounds.

Door Open: If the door is left open for 5 minutes or more, the indicator lights up and alarm sounds. Close the door to turn off the alarm. If the door is left open for 10 minutes, the interior light turns off.

High Temp: If the temperature inside the appliance is too high, the indicator lights up and the alarm sounds.

7.1 Sabbath Mode

The Sabbath Mode disables parts of the appliance and its controls to support observance of the weekly Sabbath and religious holidays in the Orthodox Jewish community. The compressor and fan keep working in normal mode. Their operation does not change when the door opens or closes.

NOTE

The temperature setting is not affected by the Sabbath Mode.
Sounds and alarms are off. If a fault occurs, the appliance keeps working in the preset fault mode, but it does not show an error code or make a sound.

1. To enter the Sabbath Mode, press and hold the Temp F-C and — buttons together for 5 seconds.

The display shows **Sb** when the function is active.

2. To exit the Sabbath Mode, press and hold the Temp F-C and — buttons together for 5 seconds.

NOTE

While in Sabbath Mode, the lights and the control panel do not work until Sabbath Mode is deactivated. The appliance stays in Sabbath Mode after power failure recovery. Deactivate it with the appliance control.

For further assistance, guidelines for proper use and a complete list of models with the Sabbath feature, please visit star-k.org.

8. INTERNAL WATER DISPENSER

Your appliance is equipped with an internal water dispenser mounted inside the cabinet, on the left hand fresh food door.

8.1 Priming the Water Supply System

⚠ CAUTION!

For proper dispenser operation, the recommended water supply pressure should fall between 30 psi and 100 psi. Excessive pressure may cause the system to malfunction.

Before dispensing water for the first time, be sure to prime the water supply system. If you do not flush the system, the first glasses of water may have discolored water or have an odd flavor.

1. Ensure the dispenser is enabled. Refer to Controls and Settings.
2. Begin filling the system by pressing and holding a drinking glass against the water dispenser paddle.
3. Keep the glass in this position until water comes out of the dispenser. It may take about 4 minutes to purge air from the system.
4. Continue dispensing water for about 1 full gallon. Stop to empty the glass if necessary.

ⓘ If you prefer to keep the internal water dispenser disabled, use the appliance control display to disable it.

Place a cup against the paddle and press to dispense water.

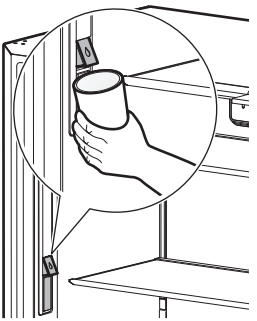

9. STORAGE FEATURES

9.1 Air Vents

Do not place items in front of the air vents as this impacts the temperature performance.

9.2 Door Bins

To remove the door bin:

1. Lift the bin up.
2. Pull it straight out.

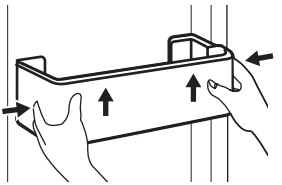

9.3 Shelves

Before adjusting the shelf remove all food.

Slide-Out Shelf

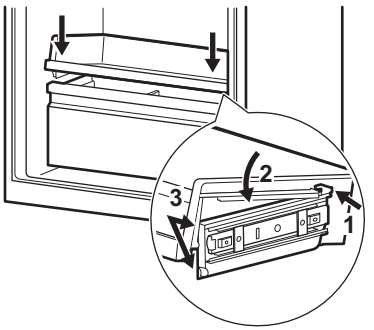

To insert the drawer fit it on the hook it the back, rotate it down and push it down to snap on the front.

Cantilever Shelf

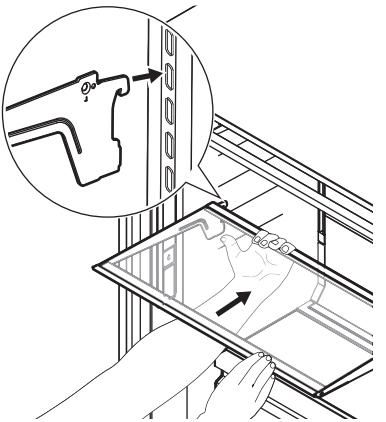

To remove the shelf tilt the front up to release the tabs and lift until clear of the supports. Pull it out.

Do not block the temperature sensor with food.

9.4 Drawers

This appliance includes a variety of storage drawers.

Crispers
Crispers are designed for storing fruits, vegetables, and other fresh produce.

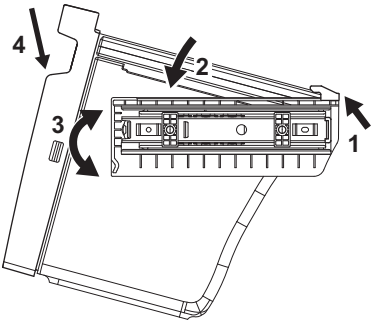

To insert the drawer fit it on the hook it the back, rotate it down and push it down to snap on the front.

Drawer with dividers
Use the lower drawer with or without dividers to separate food as needed.

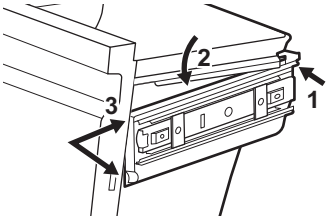

To insert the drawer fit it on the hook it the back, rotate it down and push it down to snap on the front.

10. FILTER REPLACEMENT

10.1 PureAir™ Air Filter

The air filter is located in the top center of the fresh food compartment.

To order replacement filters, please visit our online store at Frigidaire.com or call toll-free at 1-800-374-4432. Here are the product numbers to request when ordering:

- PureAir™ RAF-1 Air Filter FRGPAAF1

NOTE

We recommend you always use genuine Frigidaire replacement filters only.

10.2 Replacing your PureAir™

To ensure optimal filtering of refrigerator odors, you should change the air filter every 6 months. The filter status light on the main controls prompts you to replace the filter after 6 months.

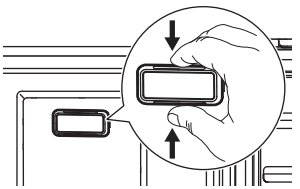

To remove and replace the air filter:

1. Remove the air filter cover by squeezing the top and bottom of the cover together and removing from liner.
2. Remove the old filter and discard it.
3. Unpack the new filter and snap it into the filter cover. Install the open face (carbon media) of the filter facing outward in the cover.
4. Replace air filter cover by squeezing and snapping it back into place.
5. Press and hold the Reset Air Filter button on the appliance control display for 3 seconds. When the indicator turns off, the status has been reset.

10.3 PureAir Produce Keeper™

Keep fruits and vegetables fresher longer with PureAir Produce Keeper™. Our produce keeper absorbs ethylene gas, the natural gas that causes produce to ripen quicker. Reduce food waste, save money and enjoy fresh-tasting produce with a longer storage life.

Ordering Replacement Filters
To order your replacement filters, please visit our online store at Frigidaire.com, by calling toll-free at 1-800-374-4432, or by visiting the dealer where you purchased your refrigerator. Frigidaire recommends that you replace your filters at least once every 6 months.

Here are the product numbers to request when ordering:

PureAir Produce Keeper™ PK-1 Part #FRPAPKRF

10.4 Installing the PureAir Produce Keeper™

⚠ CAUTION!

- Do not open:
  Contents may irritate eyes or skin. Keep out of reach of children.
- First aid:
  Contains potassium permanganate. In case of contact with eyes or skin, rinse immediately with water.
- Do not eat:
  If swallowed, seek medical treatment immediately.

1. Remove the plastic wrapper. Insert unopened packet into the holder in the crisper drawer.
2. For optimal results, replace the refill every 6 months along with your air filter.

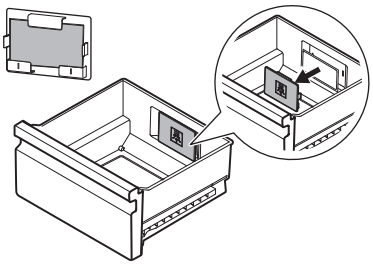

10.5 PurePour Connect™ Water Filter

Keep safe, great-tasting water flowing with a PurePour Connect™ water filter. Using a PurePour Connect™ water filter:

- **Makes safe water second nature**
  PurePour Connect™ water filters are certified to reduce contaminates* and keep great-tasting water flowing for you and your family.
- **Produces purity you can trust**
  Know for certain your PurePour Connect™ water filter is a protector. Counterfeits and knockoffs put your refrigerator and health at risk. Frigidaire Genuine Filters are the smarter, safer choice.
- **Every drop gives back**
  Partnered on sustainability efforts the use of a PurePour Connect™ water filter helps cut back on the cost and use of plastic used to produce and package bottled water

*For the complete list, please see Performance Data Sheet on Frigidaire.com.

10.6 More about your advanced water filter

LEAD FREE
UPC
C ®

The PurePour Connect™ PWF-1™ FPPWFUO1, PurePour Connect™ PWF-2™ FPPWFUO2 ice and water filter system is tested and certified by IAPMO R&T against Standards 42, 53, 401 and NSF/ANSI/CAN 372CSA B483.1 in PurePour Connect™ PWF-1/PWF-2 for the reduction of claims specified on the Performance Data Sheet. Visit Frigidaire.com for more information.

Do not use with water that is microbiologically unsafe or of unknown quality without adequate disinfection before or after the system. Use systems certified for cyst reduction on disinfected waters that may contain filterable cysts.

Test & certification results

- Rated Capacity - 125 gal / 453 L for PurePour Connect™ and ice and water filter
- Rated service flow - .50 gal/min
- Operating Temperature: Minimum: 33°F, Maximum: 100°F
- Maximum rated pressure - 100 lbs/in²
- Recommended minimum operating pressure: 30 lbs/in²

10.7 Ordering replacement filters

NOTE

When you order your replacement filter, please reorder the same filter type currently in your refrigerator.

To order your replacement filters, please call toll-free at 1-800-374-4432, or visit Frigidaire.com. Frigidaire recommends that you order extra filters when you first install your appliance, and that you replace your filters at least once every 6 months.

Here are the product numbers to request when ordering:

- PurePour Connect™ Water Filter PWF-1™ FPPWFUO1

Find the Performance Data Sheet located in the Guides and Manuals section for your specific water filter on Frigidaire.com:

- PWF-1™ FPPWFUO1 Performance Data Sheet

10.8 Replacing your PurePour Connect™ water filter

Water Filter Location:

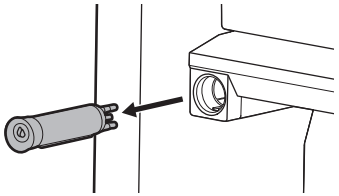

In general, you should change the water filter every 6 months to ensure the highest possible water quality. Water Filter Status on the user interface prompts you to replace the filter after a standard amount of water (125 gal / 453 L for PurePour Connect™) has flowed through the system.

If you have not used your appliance for a period of time (during moving for example), change the filter before reinstalling the appliance.

It is not necessary to turn the water supply off to change the filter. Small amounts of water may be released during the filter replacement.

1. Remove the filter by pushing on the end/face of the filter.
2. Slide the old water filter cartridge straight out of the housing and discard it.
3. Unpack the new filter cartridge. Using the alignment guide, slide it gently into the filter housing until it stops against the snap-in connector at the back of the housing.
4. Push firmly until the cartridge snaps into place. There is a clicking sound as the cartridge engages with the snap-in connector.
5. Press a drinking glass against the water dispenser while checking for any leaks at the filter housing. Any spurts and sputters that occur as the system purges air out of the dispenser system are normal.
6. After filling one glass of water, continue flushing the system for about 4 minutes.

11. NORMAL OPERATING SOUNDS

ⓘ The appliance can make various sounds. This is normal.

ⓘ During automatic defrost cycle, a red glow in the back wall vents of the freezer compartment is normal.

11.1 Understanding the sounds you may hear

- **Evaporator:** Refrigerant flows through the evaporator, making a boiling or gurgling sound.
- **Evaporator fan:** Moves air through the appliance, creating a blowing sound.
- **Defrost heater:** During defrost cycles, water dripping onto the defrost heater causes a hissing or sizzling sound. After defrosting, a popping sound occurs.
- **Compressor:** Runs with a humming or pulsating sound.
- **Drain pan (not removable):** Water drips into the drain pan during defrost, making a sound.

12. CARE AND CLEANING

12.1 Care and Precautions

Wipe up any spills immediately. Clean the appliance at least twice a year. Take the following precautions:

- Unplug the electrical power cord from the wall outlet before cleaning.
- Do not use chloride or cleaners with bleach to clean stainless steel.
- Do not use cleaners that are abrasive or contain petroleum. Do not use paper towels or other abrasive cleaning materials or strong alkaline solutions.
- Do not wash any removable parts in a dishwasher.
- Do not remove the serial plate. Removal of your serial plate voids your warranty.
- Remove adhesive labels by hand. Do not use sharp instruments.

➔ IMPORTANT

If you store or move your appliance in freezing temperatures, drain the water supply system completely.

12.2 Cleaning Instructions

Interior and door liners
Use soap and water or 2 tablespoons of baking soda in 1 quart of warm water.

Door gaskets, drawers and bins
Use soap and water, wipe with a clean soft cloth.

Exterior and stainless steel handles
Use soap and water, non abrasive glass cleaner or stainless steel cleaners. Do not use cleaners containing ammonia, bleach or alcohol. Clean stainless steel elements with soapy water and a dish cloth or a stainless steel cleaner. Dry with a soft cloth.

13. TROUBLESHOOTING

This section will help you with common issues. If you do need service, we can get that started for you. Visit Frigidaire.com or call toll-free 1-800-374-4432.

Appliance does not run.

- Ensure the plug is tightly pushed into an electrical outlet.
- Check/replace the fuse with a 15amp time-delay fuse. Reset the circuit breaker.

Appliance temperature is unsatisfactory.

- Adjust the temperature. Allow 24 hours for the temperature to stabilize.

The appliance is noisy or vibrates.

- The appliance is not level, or the floor is weak.
- Adjust the anti-tip bracket.

Odors in the appliance.

- Clean the interior.
- Cover or wrap the foods that produce odors.

Cabinet light is not working.

- Ensure the plug is tightly pushed into an electrical outlet.

Mullion or side walls are warm.

- Mullion or side walls may be warm to the touch for the first 24 hours of operation. This is normal.

14. LIMITED WARRANTY

Your appliance is covered by a two-year limited warranty. For two years from your date of delivery, Electrolux will pay all costs for repairing or replacing any parts of this appliance that prove to be defective in materials or workmanship when such appliance is installed, used and maintained in accordance with the provided instructions. If your product cannot be repaired or replaced, you will be refunded the purchase price less any depreciation, taxes or other costs.

Exclusions

This warranty does not cover the following:

1. Products with original serial numbers that have been removed, altered or cannot be readily determined.
2. Product that has been transferred from its original owner to another party or removed outside the USA, Puerto Rico, or Canada.
3. Rust on the interior or exterior of the unit.
4. Products purchased “as-is” are not covered by this warranty.
5. Food loss due to any refrigerator or freezer failures.
6. Products used in a commercial setting.
7. Service calls which do not involve malfunction or defects in materials or workmanship, or for appliances not in ordinary household use or used other than in accordance with the provided instructions.
8. Service calls to correct the installation of your appliance or to instruct you how to use your appliance.
9. Expenses for making the appliance accessible for servicing, such as removal of trim, cupboards, shelves, etc., which are not a part of the appliance when it is shipped from the factory.
10. Service calls to repair or replace appliance light bulbs, air filters, water filters, other consumables, or knobs, handles, or other cosmetic parts.
11. Surcharges including, but not limited to, any after hour, weekend, or holiday service calls, tolls, ferry trip charges, or mileage expense for service calls to remote areas, including the state of Alaska.
12. Damages to the finish of appliance or home incurred during transportation or installation, including but not limited to floors, cabinets, walls, etc.
13. Damages caused by: services performed by unauthorized service companies; use of parts other than genuine Electrolux parts or parts obtained from persons other than authorized service companies; or external causes such as abuse, misuse, inadequate power supply, accidents, fires, or acts of God.

DISCLAIMER OF IMPLIED WARRANTIES; LIMITATION OF REMEDIES

CUSTOMER’S SOLE AND EXCLUSIVE REMEDY UNDER THIS LIMITED WARRANTY SHALL BE PRODUCT REPAIR OR REPLACEMENT AS PROVIDED HEREIN. CLAIMS BASED ON IMPLIED WARRANTIES, INCLUDING WARRANTIES OF MERCHANTABILITY OR FITNESS FOR A PARTICULAR PURPOSE, ARE LIMITED TO ONE YEAR OR THE SHORTEST PERIOD ALLOWED BY LAW, BUT NOT LESS THAN ONE YEAR. ELECTROLUX SHALL NOT BE LIABLE FOR CONSEQUENTIAL OR INCIDENTAL DAMAGES SUCH AS PROPERTY DAMAGE AND INCIDENTAL EXPENSES RESULTING FROM ANY BREACH OF THIS WRITTEN LIMITED WARRANTY OR ANY IMPLIED WARRANTY. SOME STATES AND PROVINCES DO NOT ALLOW THE EXCLUSION OR LIMITATION OF INCIDENTAL OR CONSEQUENTIAL DAMAGES, OR LIMITATIONS ON THE DURATION OF IMPLIED WARRANTIES, SO THESE LIMITATIONS OR EXCLUSIONS MAY NOT APPLY TO YOU. THIS WRITTEN WARRANTY GIVES YOU SPECIFIC LEGAL RIGHTS. YOU MAY ALSO HAVE OTHER RIGHTS THAT VARY FROM STATE TO STATE.

If You Need Service

You must provide the appliance serial number and your receipt, delivery slip, or some other appropriate payment record to establish the warranty period should service be required. If service is performed, it is in your best interest to obtain and keep all receipts. Service under this warranty must be obtained by contacting Electrolux at the addresses or phone numbers below.

This warranty only applies in the USA, Puerto Rico and Canada. In the USA and Puerto Rico, your appliance is warranted by Electrolux Consumer Products, Inc. In Canada, your appliance is warranted by Electrolux Canada Corp. Electrolux authorizes no person to change or add to any obligations under this warranty. Obligations for service and parts under this warranty must be performed by Electrolux or an authorized service company. Product features or specifications as described or illustrated are subject to change without notice.

USA

1-800-374-4432

Electrolux Consumer Products, Inc.

10200 David Taylor Drive

Charlotte, NC 28262

Canada

1-800-265-8352

Electrolux Canada Corp.

5855 Terry Fox Way

Mississauga, Ontario, Canada L5V 3E4

15. QUEBEC RIGHT TO REPAIR

Though Frigidaire makes every effort to make replacement parts, repair services and information necessary to maintain or repair our products available to consumers, parts, service and information are not guaranteed, pursuant to section 39 of the Consumer Protection Act, CQLR, c. P-40.1 and sections 79.18 to 79.20 of the Regulation respecting the application of the Consumer Protection Act, CQLR, c P-40.1, r. 3.



A32672101en (September 2026)