DW8601X



Product Family	Dishwashers
Commercial height	STANDARD HEIGHT
Installation	Under counter built-in
Kitchen panel	Not supplied
N° baskets	2
Motor	Inverter
EAN code	8017709363451
UPC Code	812895027747

Programs

N. of programmes	8	**Super**	Yes
Washing temperatures	45, 50, 55, 65 °F	**Regular**	Yes
Light soiling	Yes	**Intensive 65°**	Yes
Delicate	Yes	**Intensive 70°**	
Auto	Yes	**Rinse**	Yes

Options

Hi-Temp	Yes	**Delay timer option**	Up to 24 hours
Extra Fast	Yes	**Extra dry option**	Yes
Sanitize	Yes	**1/2 load FlexiZone option**	Yes
Silent	Yes	**Sanitizing option Hyclean**	Yes

Baskets

Basket colour	Grey	**Height adjustment of the upper basket**	On two levels (5cm)
Basket components colour	Grey	**Lower Basket**	With 4 foldable racks
Handle	In plastic on upper and lower basket	**Colour Inner Components**	Grey
Upper Basket	With 2 foldable racks	**Cutlery basket**	Yes

Technical Features

Width (mm)	23 9/16 "
Depth (mm)	22 7/16 "
Display type	LED display (3 digit)
Product Height (mm)	33 7/8 "
Controls	Electronic
Display	Delayed start, Programme time indicator
Programme graphics	Written in EN
On/off indicator	Yes
Rinse aid indicator	Light
End of cycle indicator	On display, with acoustic signal
Washing system	Standard
Turbidity sensor Aquatest	Yes
Flood protection system	Single Acquastop
Drying system	Natural condenser drying
Tub material	Stainless steel
Filter	Stainless steel
Concealed heating element	Yes
Can be installed in-column	Yes
Adjustable feet	5cm, from 820 to 870 mm
Airborne acoustical noise emissions dBA	45 dBA
Back feet adjustable from front	Yes
Energy Star	Yes

Electrical Connection

Connected power	1400 W
Current	12 A
Voltage	120 V
Frequency (Hz)	60 Hz
Type of connection	Single-phase
Power supply cable length	116 "
Plug	(B) NEMA 5-15P

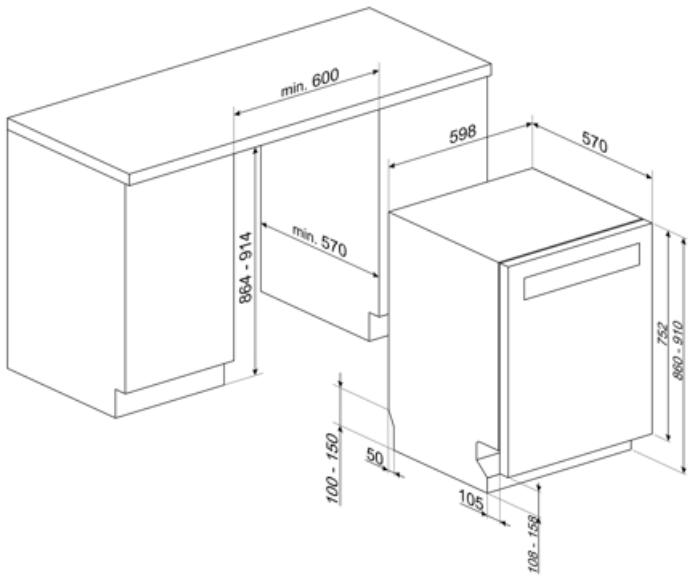

Symbols glossary



Acquastop: Some Smeg dishwashers are equipped with a simple Acquastop: float sensor in the bottom which is necesary to prevent an accidental leakage of water inside the appliance.



The Aquatest sensor is an electronic sensor that measures the degree of water transparency at the end of the initial soaking phase. ased on the values measured, the sensor sets the most suitable programme, thus obtaining the best washing results with the minimum amount of water.



Installation in column: Installation in column



Delay Timer: Option to postpone the start of the desired programme by up to 24 hours in order to programme the dishwasher to run at the desired time.



FlexiZone: The ½ load flexizone allows you to wash a reduced load saving energy, water and time and there are no restrictions on where the items are placed.



Hyclean: When the HYCLEAN option is selected, the dishwasher performs a final 10 minute rinse at a high temperature of 70°C, eliminating virtually all bacteria to achieve the highest possible standards of cleanliness. The Hyclean option can be selected with almost all cycles at temperatures above 50°C.



Smeg's evolution towards more intelligent and eco-friendly models has led to the choice of Inverter technology, which significantly reduces consumption.



Noise Level: Excellent insulation and special devices keep noise to a minimum.



Delicate: Delicate washing program is designed for delicate dishes which are not heavily soiled.



Delicate: Delicate washing program is designed for delicate dishes which are not heavily soiled.



PRG_RINSE_72dpi



PRG_STRONG_72dpi



14 place settings: Number of place settings.



EXTRA DRY This option adds a hot rinse cycle that ensures improved drying.



The Regular programme is for dishes with regular dirt, even with dried-on residues.



LIGHT SOILING Washing programme with low water and energy consumption.